LD1021519/LD1021520

1

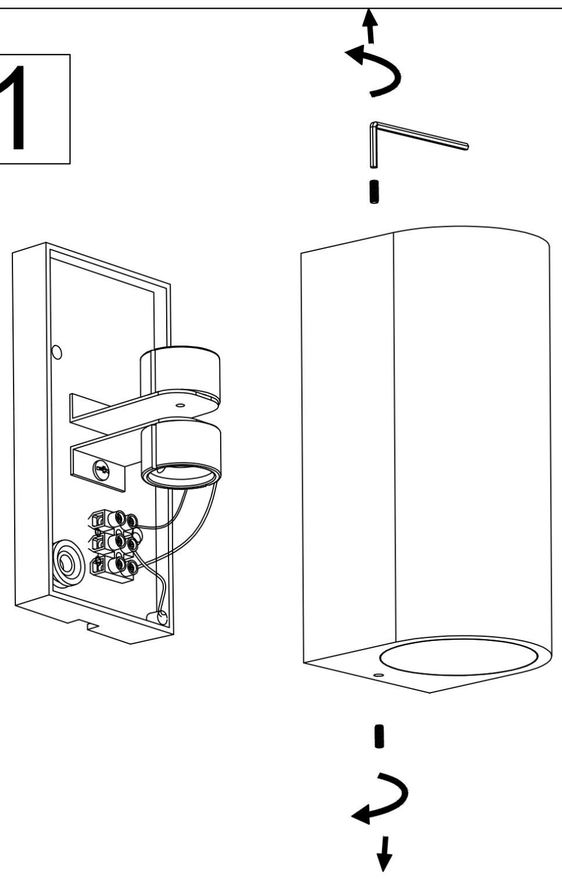

2

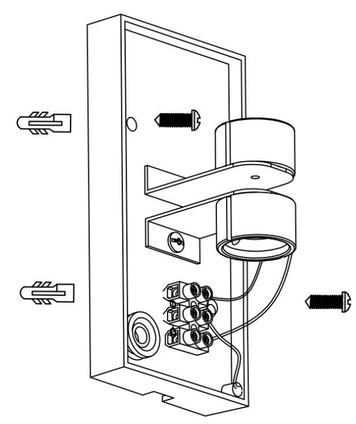

3

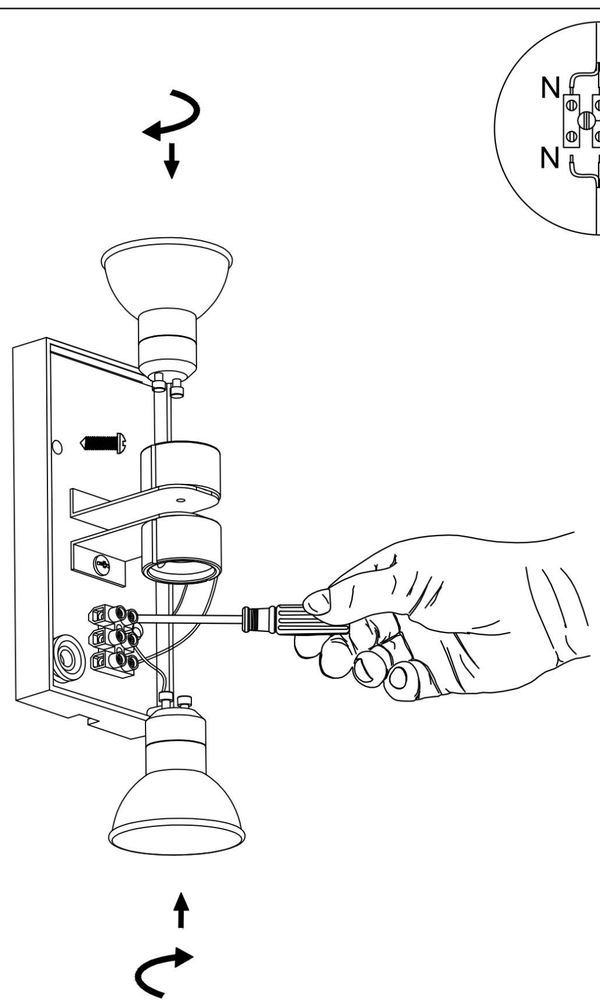

4

