LEDBOX®

www.ledbox.es



NEON FLEX

Silicone Tube 2515

Product specification

Led NEON Tubo Silicona 25x15mm









Product Features

- Anti-yellowing and heat resisting silicon glue, chemical resistance acid and alkaline, available for extremely terrible outdoor environment.
- Excellent flexibility to shape optionally.
- Uniform and soft luminance, no light spot.
- Super brightness large chip, golden wire welded and copper led holder for quicker heat dissipation, higher stability, longer life span.
- Leadless SMT technique(RoHS certificated), smooth welding joint,firm connection of led and pcb.

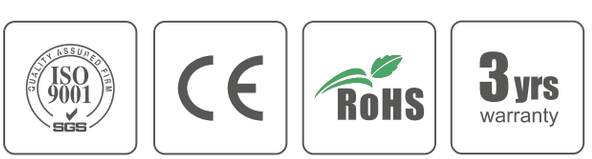

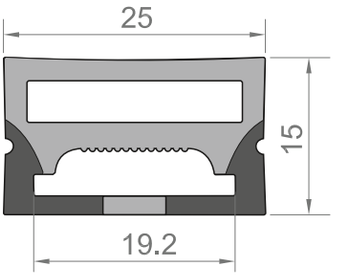

LED strip Colloid specifications comparison

Materials / Main parameters	Silicone flexible led strip	PVC flexible led strip	Notes
Colloid features in -40℃	No crack after 30 days	Totally cracked	The low temperature resistant of silicone is superior than PVC or epoxy materials
Colloid features in 120℃	No obvious change after 72 hours	Colloid changed into yellow and deformed after 2 hours	The high temperature resistant of silicone is superior than PVC or epoxy
Colloid features in 180℃	No obvious change after 72 hours	Colloid changed into brown and some melted after 20 minuts	Over 150℃, PVC is easily hydrolyzed, Viscosity becomes weaken and easily seperated
Steadily lighted in Seawater for 72 hours	No obvious change	Serious atomization on the surface	The waterproof grade of silicone led strip can reach to IP67, high resistance to acidic alkali and salt properties
Thermal conductivity	Good thermal conductivity	No thermal conductivity	Pvc and epoxy cannot conduct heat, while silicone has good thermal conductivity

Structure & size

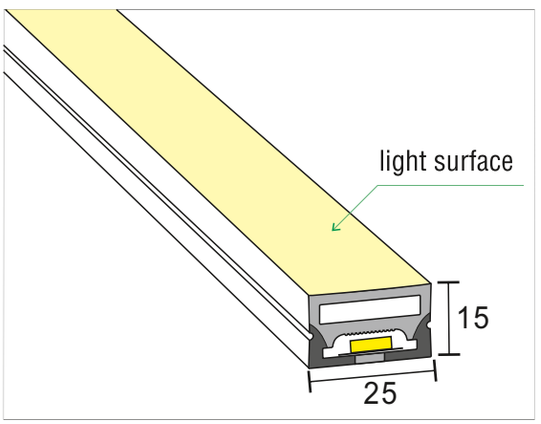

Voltage(V)	DC24V
Watt(W/M)	Max. 30W
LED Type	2216 / 2835 / 3528 / 5050
Color	White / RGB / RGBW
CRI(RA)	>80
Size(MM)	25*15
PCB Width	15-18mm
IP Grade	IP67
Working Temperature	-20~50 ℃

End caps:

1, Straight cable output:



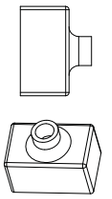

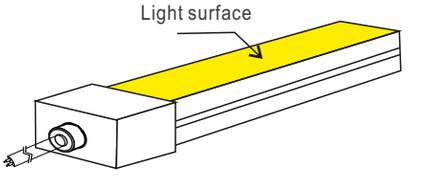

Connects light to power supply with pre-installed end feed cable, IP67. Cable length available in 0.2m,1m, 2m etc.

2, Cable output from side:



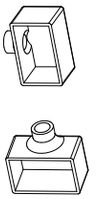

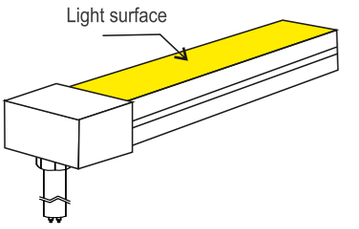

Connects light to power supply with pre-installed end feed cable, IP67. Cable length available in 0.2m,1m, 2m etc.

3, End caps without hole:



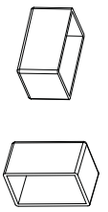

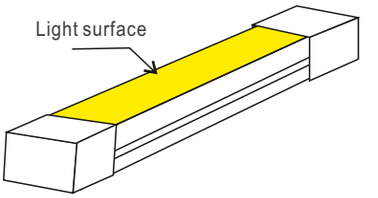

Installation

Installation accessories

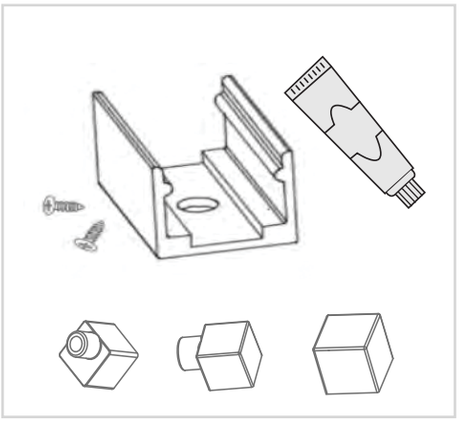

Mounting clip, glue, end caps, screws

Installation instructions

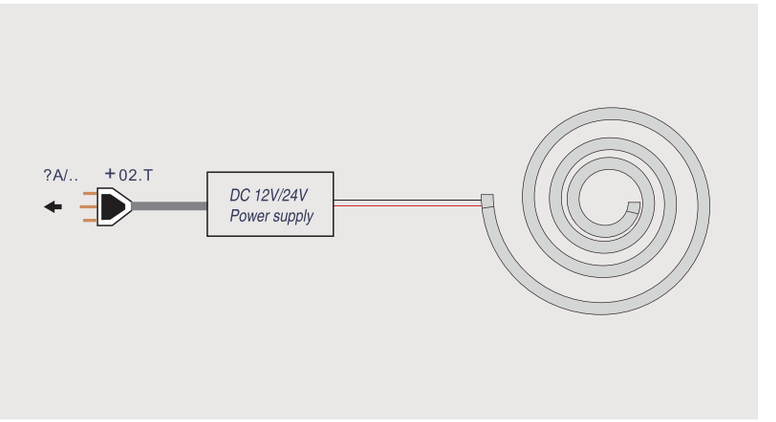

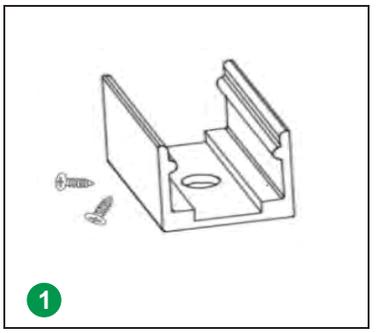

Screw and Clip

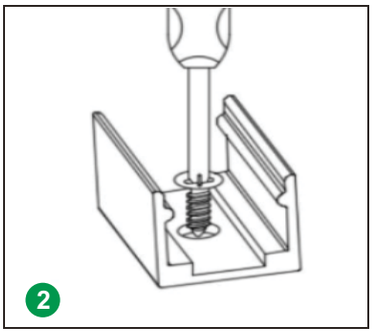

Fix the clip at appropriate area by screws

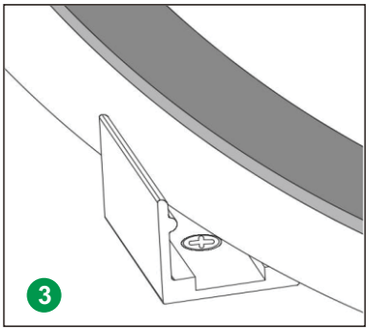

Top light emitting face up, and clip it inside gently.

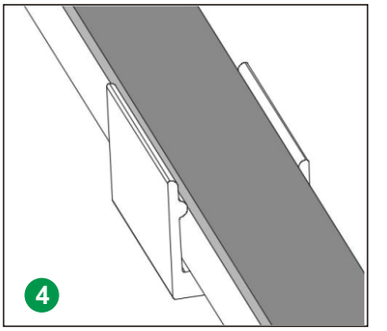

Lock it into the clip in parallel.

Cutting Method

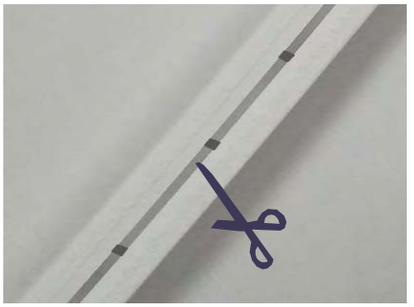

Cut it only at the cutting sign.

Enclose the cutting end

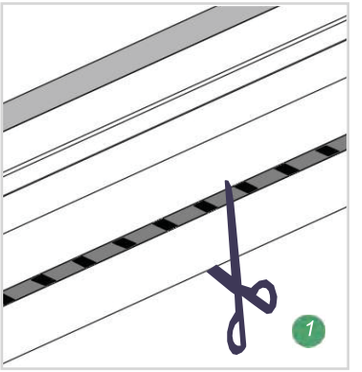

Cut

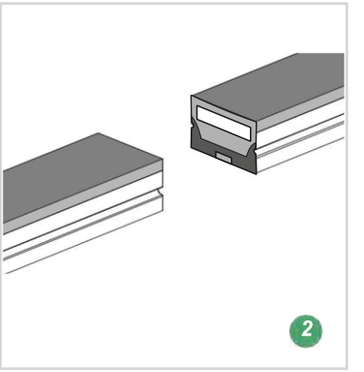

After Cutting

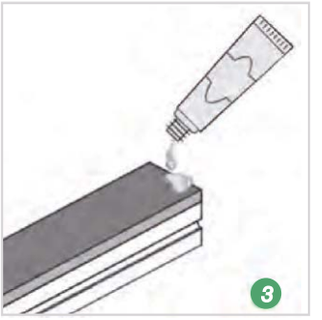

coat the section with glue uniformly after cutting

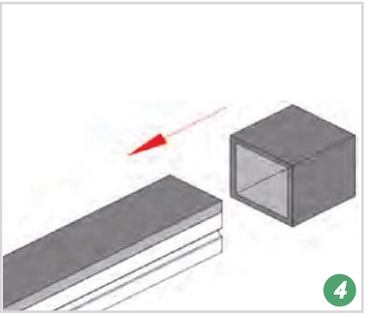

Insert the section into the plug according to direction of arrow



Dry the plug with hot wind or natural wind until make sure the installation is firm

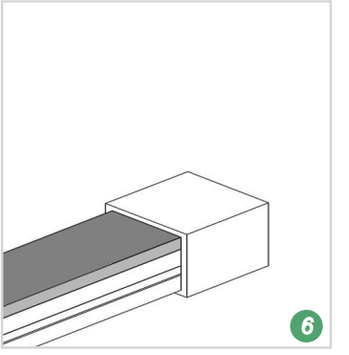

The effect of finished plug installation

Announcements

Please note that the strips are not bendable to all directions. As the appropriate specific shape and degree, please follow the following instruction:

Correct bending way

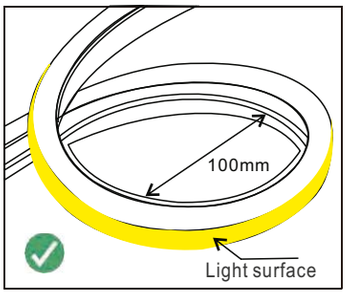

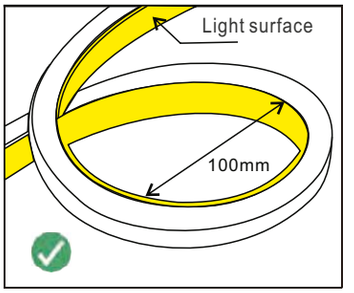

Lighting inside or outside as above
Circle Bending Minimum Diameters: 100mm

Wrong Bending

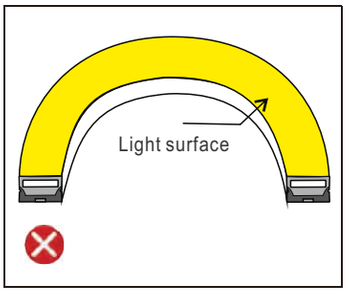

Do not bend it at side direction.

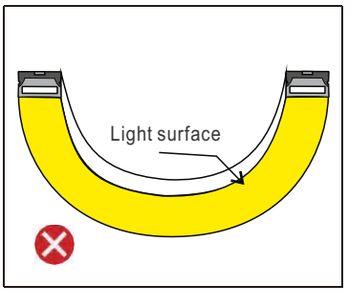

Do not bend it at side direction.

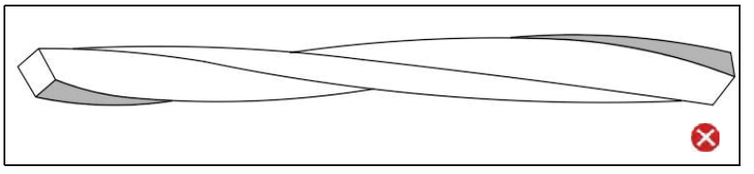

Do not twist the neon strip, otherwise the led will be damaged.

- LED strips are low voltage products, you must use the power supply(transformer). Do not connect the led strip directly to the AC 110v or AC 220v, otherwise it will burn out the LED strips and lead to safety (security)accidents.

- Please read the specifications thoroughly before installation by professional staff to make sure the safe use.

Packaging



50m/Roll





1Roll/box