LD1051829 (Vertical ceiling)
Installation Steps

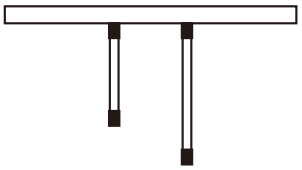

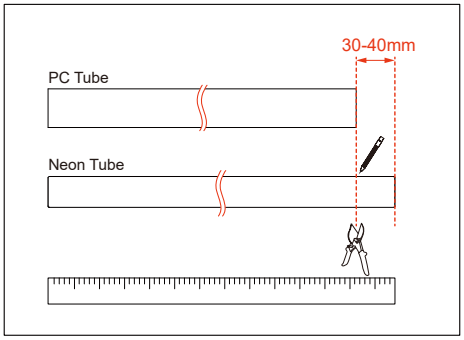

1 Attention: length of PC Tube should be 30~40mm less than Neon Tube

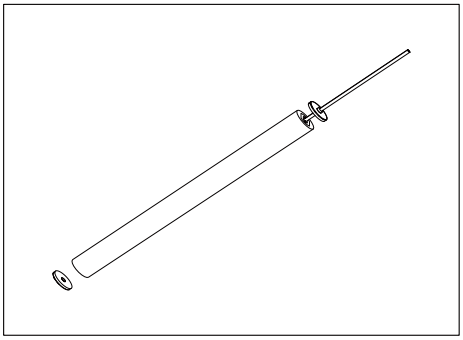

2 Seal endcaps on both sides with glue

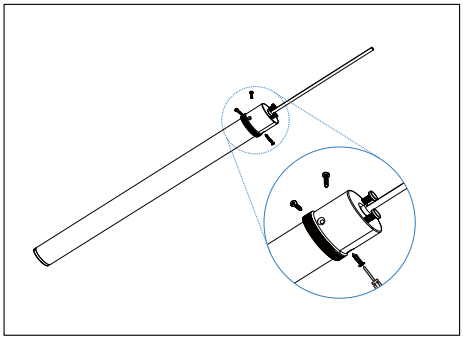

3 Fix metal outer endcaps by screws in wire side

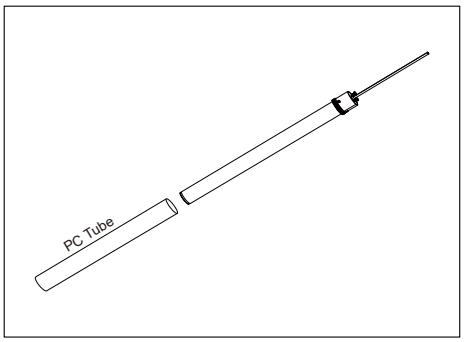

4 Put the matching PC tube

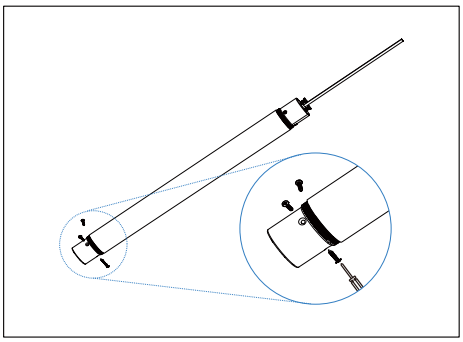

5 Fix tightly with metal encaps on other side by screws

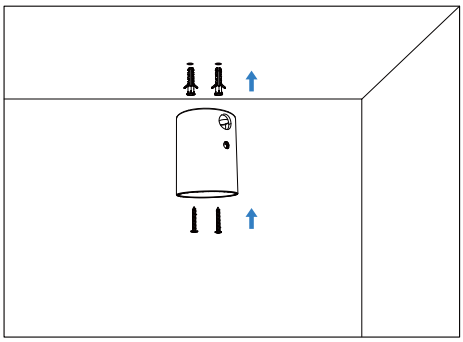

6 Fix the ceiling metal head by screws in ceiling

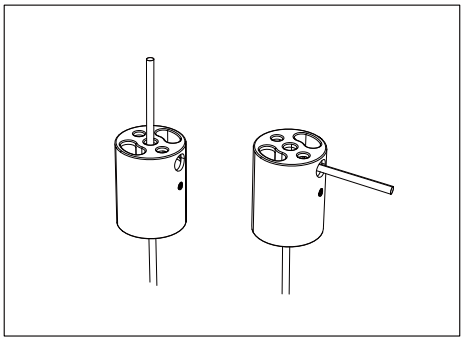

7 Optional vertical or lateral installation of the ceilding head

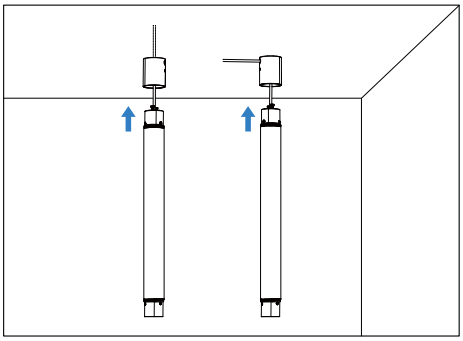

8 Put the finished product into fixed ceiling head

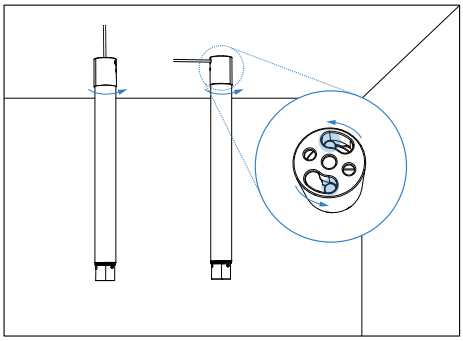

9 Spin the tube to completely match for the inner clasp to avoid product falling off

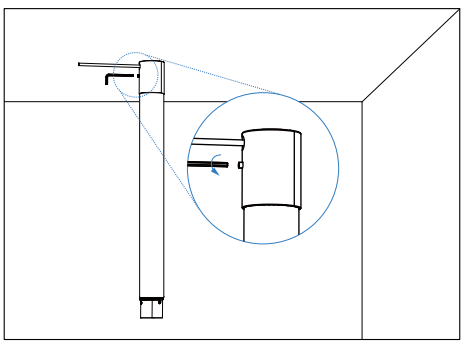

10 Tighten the screws

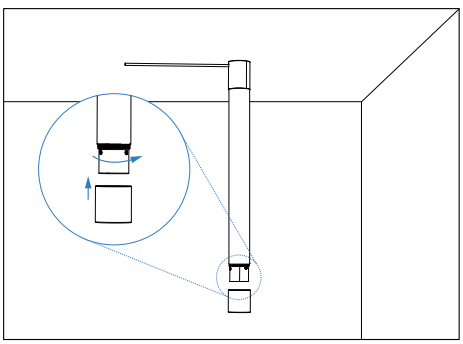

11 Spin metal endcaps on button to be attached firmly

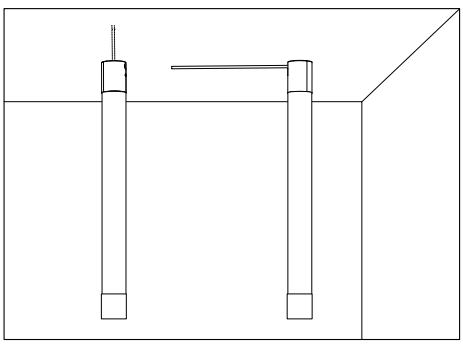

LD1051830 (Vertical hoisting)
Installation Steps

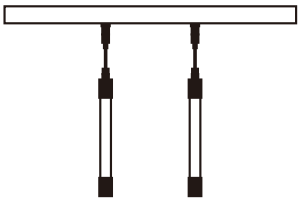

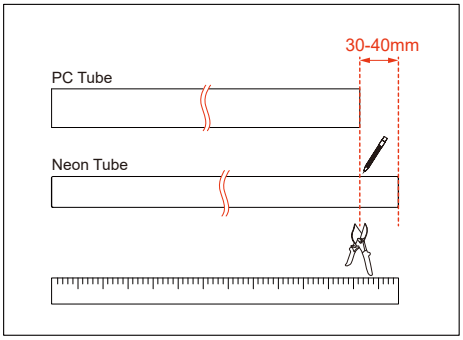

1 Attention: length of PC Tube should be 30~40mm less than Neon Tube

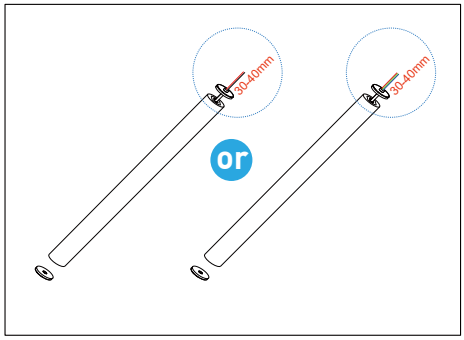

2 Insatllation is easier with 30~40mm 2P cable

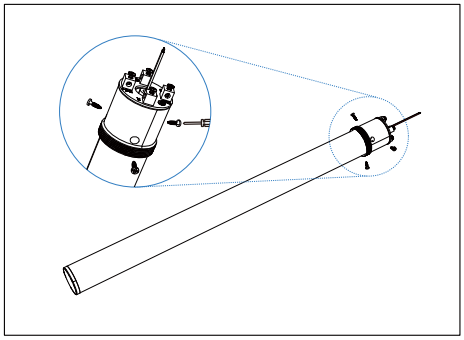

3 Fix accessory into the tube by screws

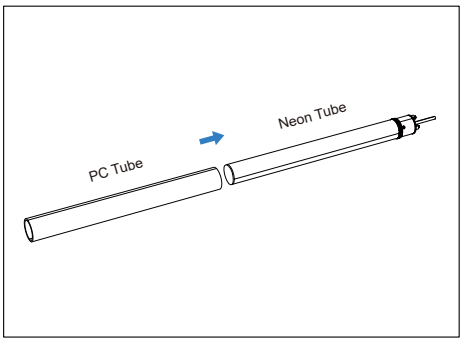

4 Put the matching PC tube

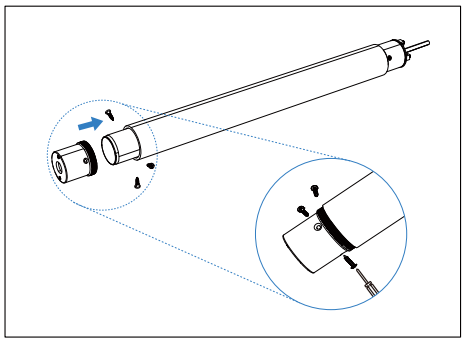

5 Fix tightly with metal encaps on other side by screws

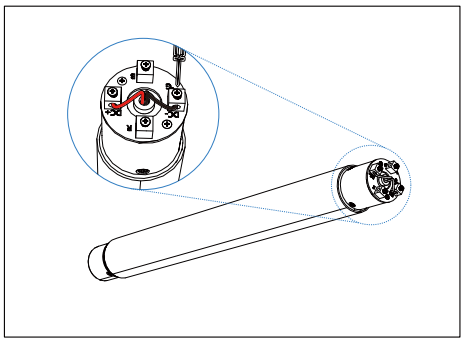

6 Peel the cable and put them through corrent pole holes

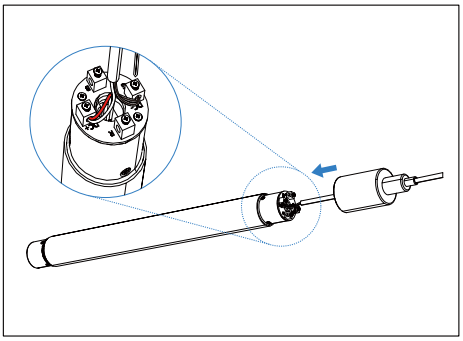

7 Peel the cable and put them through corrent pole holes

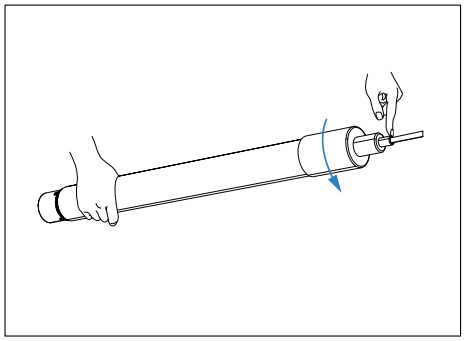

8 Press the elastic head to the lowest and spin the tube in

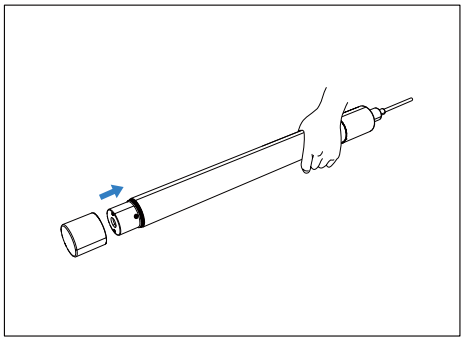

9 Spin the button endcaps to firmaly attach to the tube

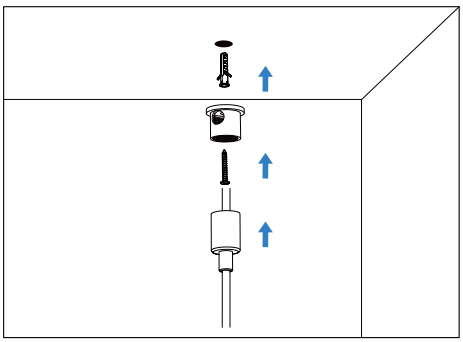

10 Take apart the wire locker and put the cable through the head

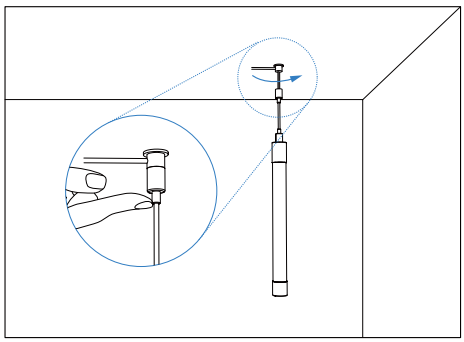

11 Fix the top of wire locker to ceiling by screws and tighten accessories after putting through out the cable

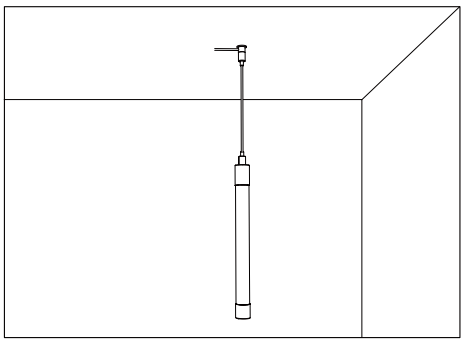

LD1051831 (Double-head ceiling)
Installation Steps

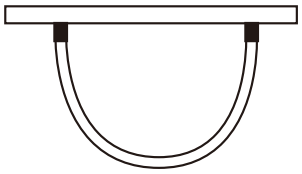

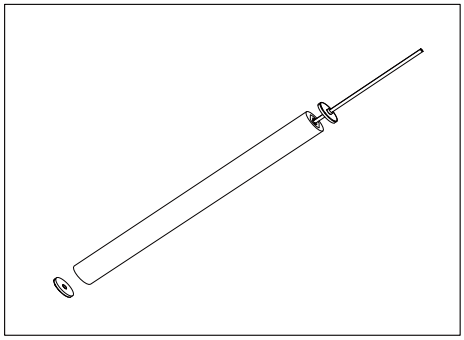

1 Product picture

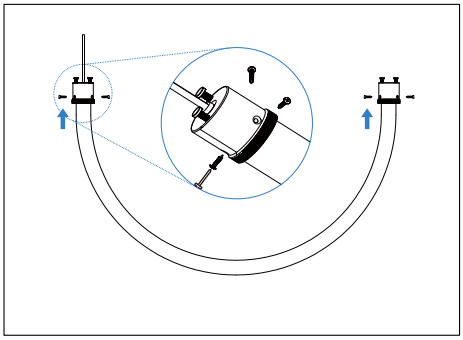

2 Put accessories into the tube and fix with screws

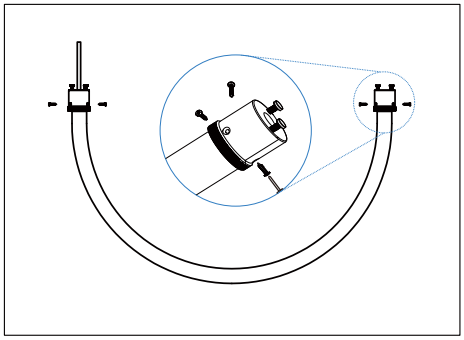

3 Put accessories into the tube and fix with screws

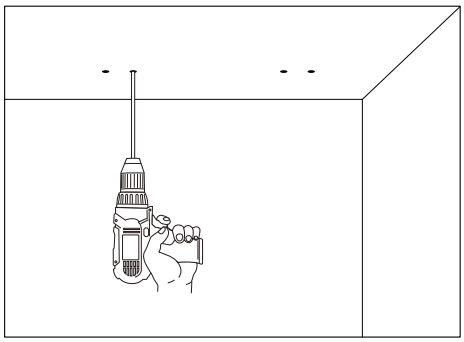

4 Drill in specific mounting placement

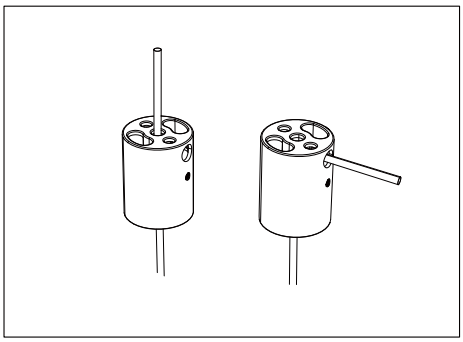

5 Optional vertical or lateral installation of the ceilding head

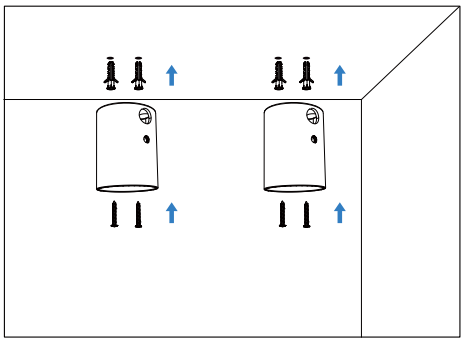

6 Fix the ceiling metal head by screws in ceiling

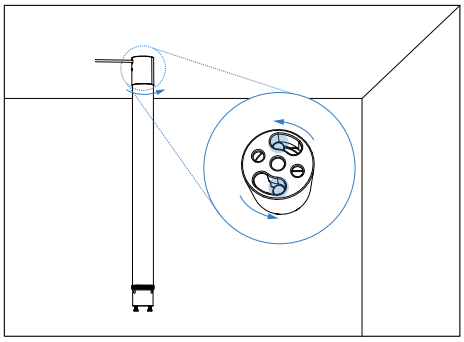

7 Spin the tube to completely match for the inner clasp to avoid product falling off

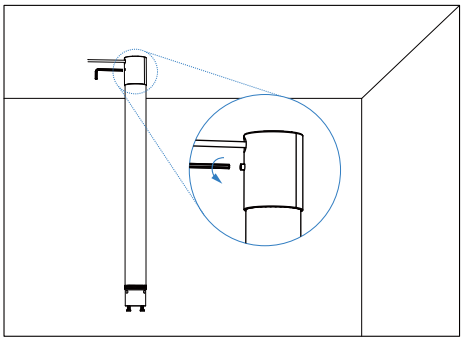

8 Tighten the screws

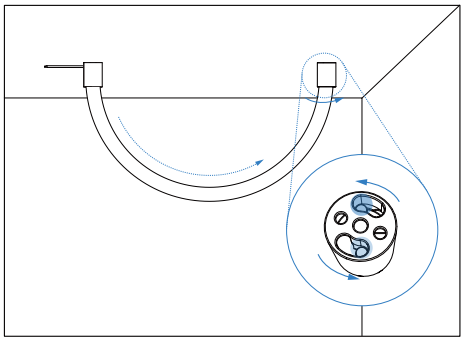

9 Spin the tube to completely match for the inner clasp to avoid product falling off

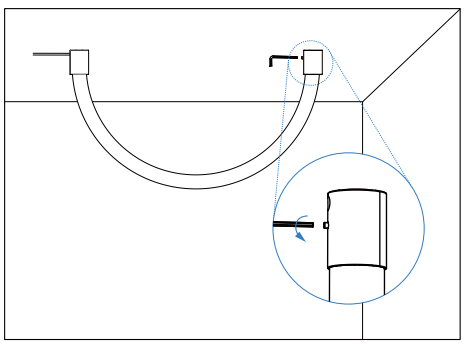

10 Tighten the screws

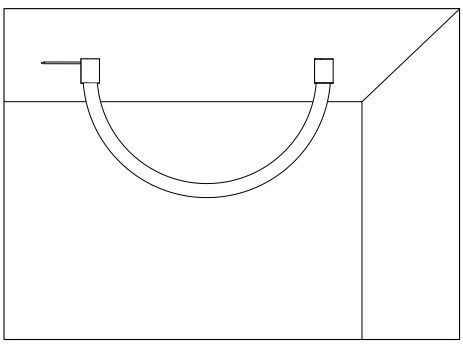

11

LD1051832 (Horizontal hoisting)
Installation Steps

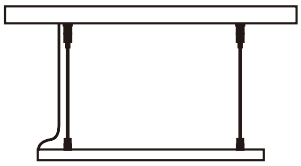

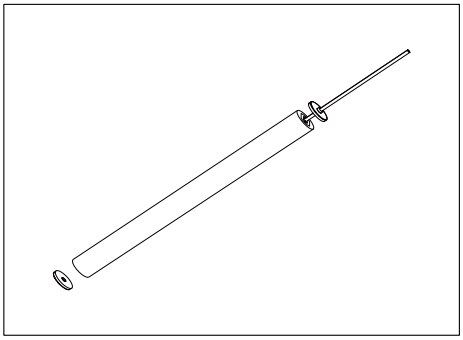

1 Product picture

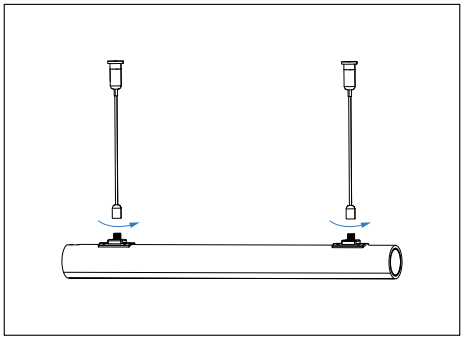

2 Spin to the limit

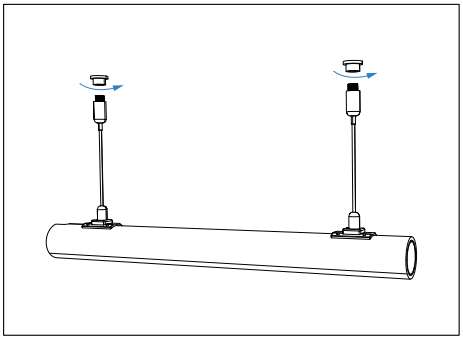

3 Take apart the head of wire locker

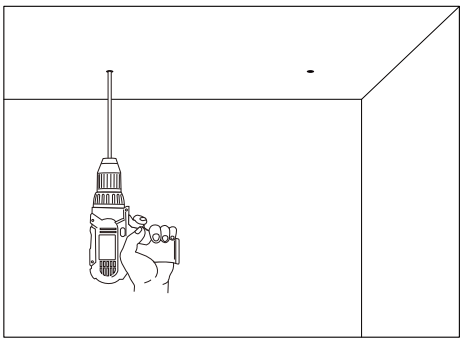

4 Drill in specific mounting placement

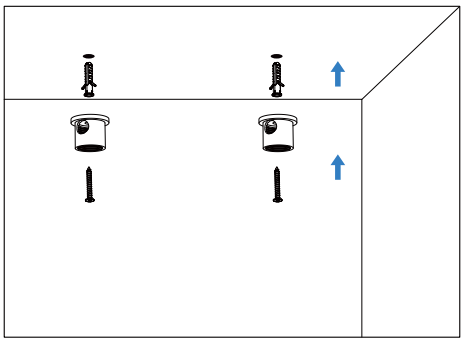

5 Fix the separate wire locker in ceiling

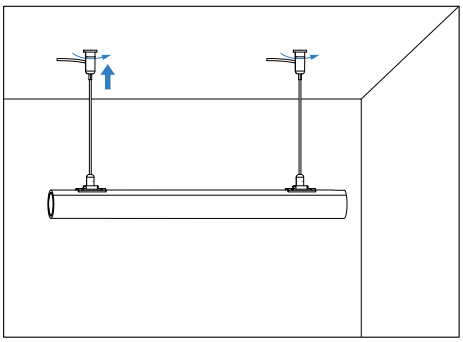

6 Spin upwards to the limit

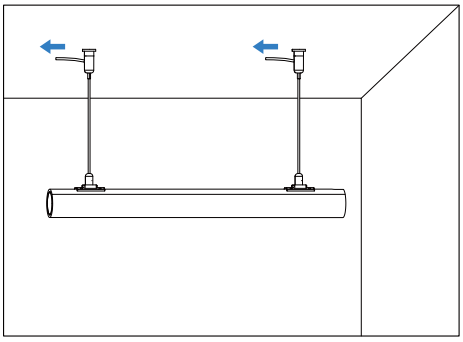

7 Pull the steel rope to adjust the height

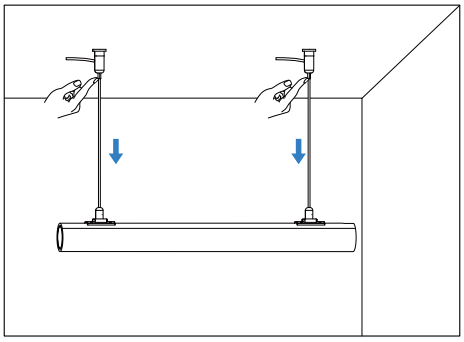

8 Press the elastic head and pull downwards to readjust the height

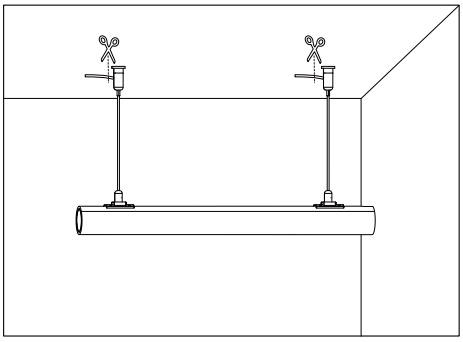

9 Cut off the exposed steel rope

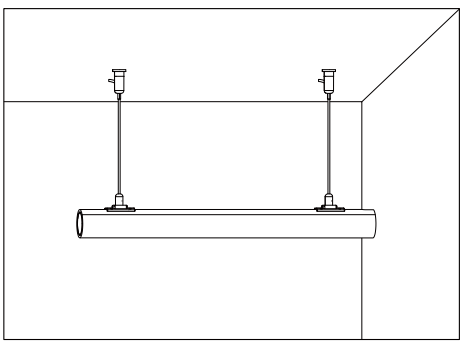

10 Picture of finished product after installation

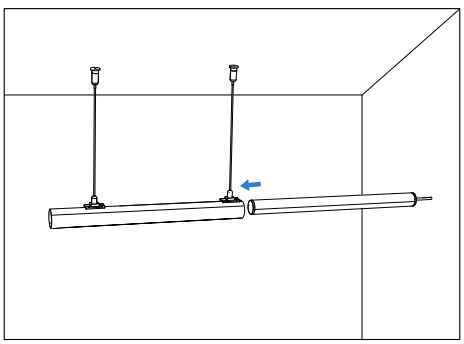

11 Put the tube into finished accessories

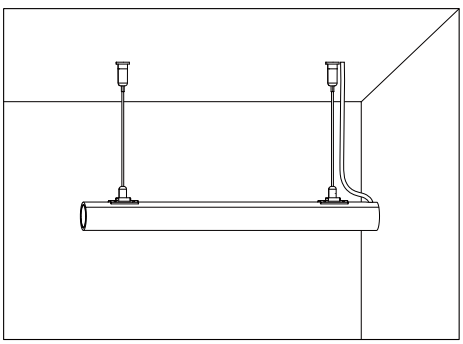

LD1051833 (Round hoisting)
Installation Steps

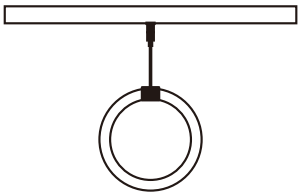

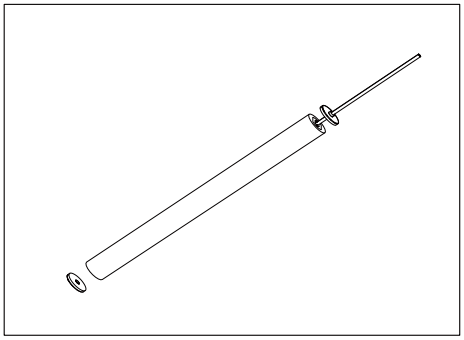

1 Product picture

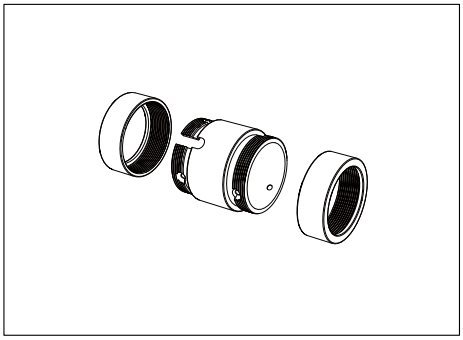

2 Spin to the limit

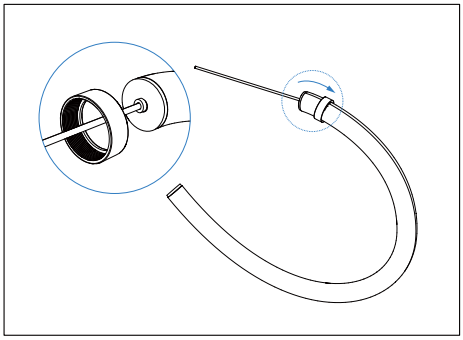

3 Put the small accessory into the tube

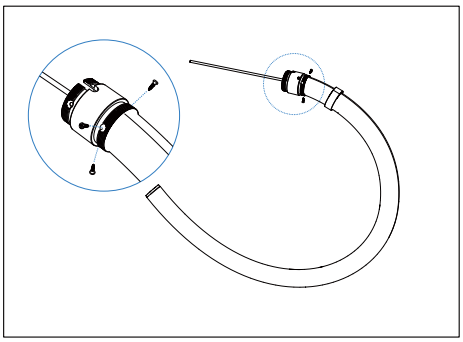

4 Put the accessory into the tube according to direction as picture and tighten them

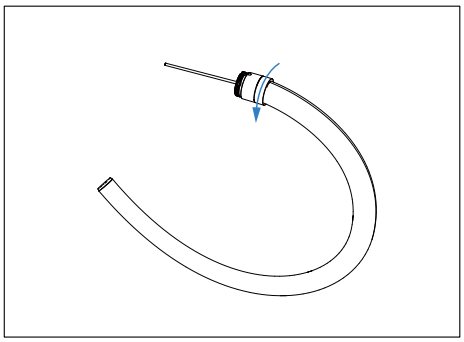

5 Lock small pieces firmly into the main accessories

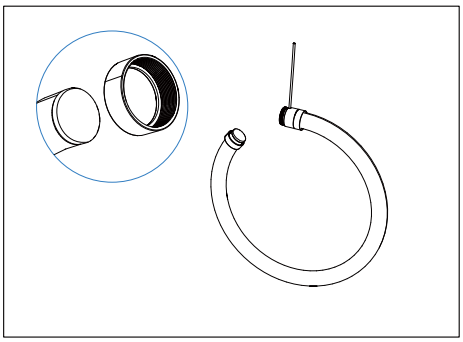

6 Put the small pieces into other side

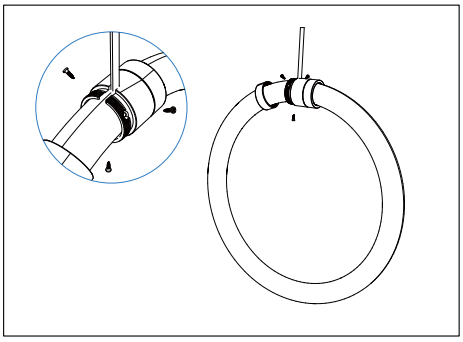

7 Plug the cable into wire hole and lock it

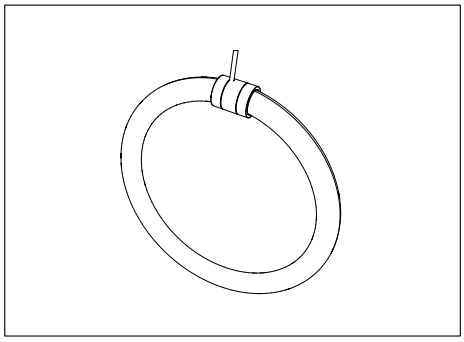

8 Tighten small piece of another side into main accessory

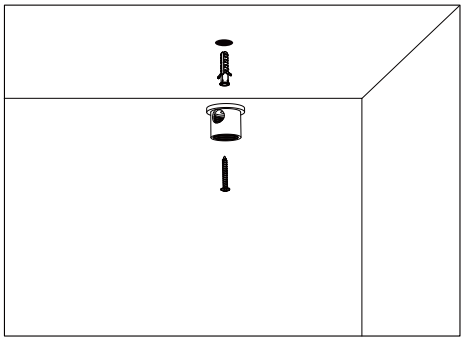

9 Take apart the wire locker and install in ceiling

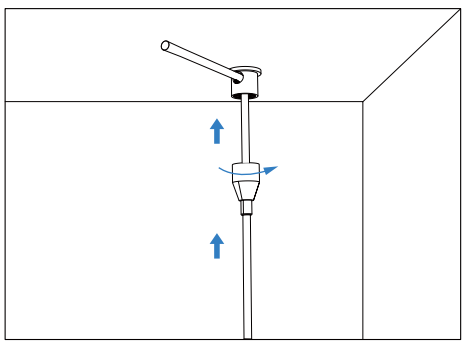

10 Put the cable through holes one by one

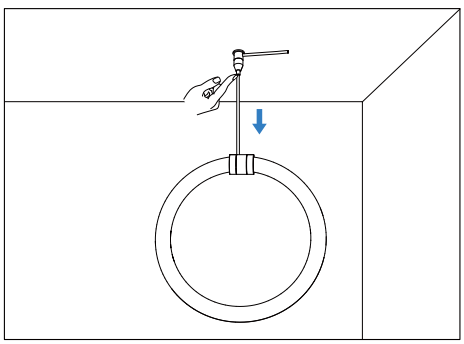

11 Press the elastic head and pull downwards to adjust the height

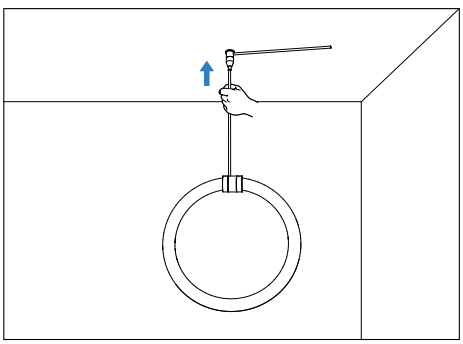

12 Press the elastic head and pull upwards to lock it

LD1051834 (Telescopic rod ceiling)
Installation Steps

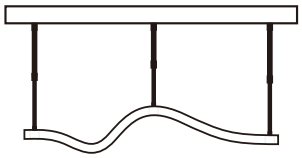

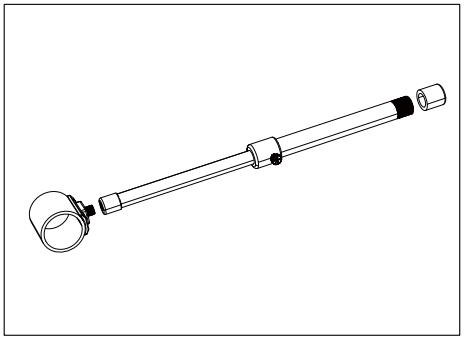

1 Accessories picture

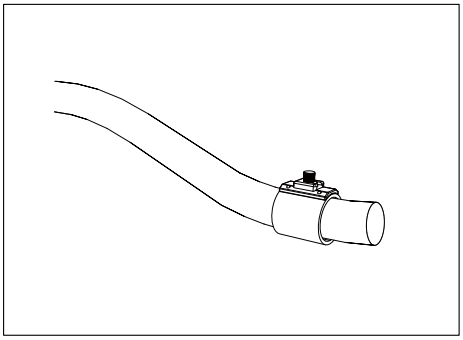

2 Put the PC accessory into the tube

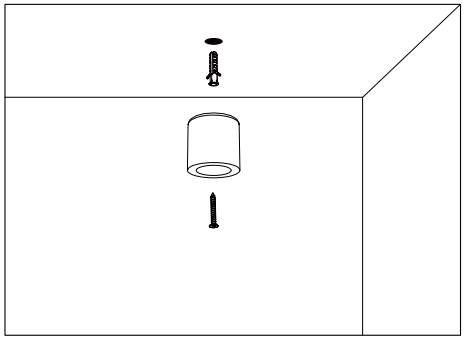

3 Fix accessory as picture in installation placement

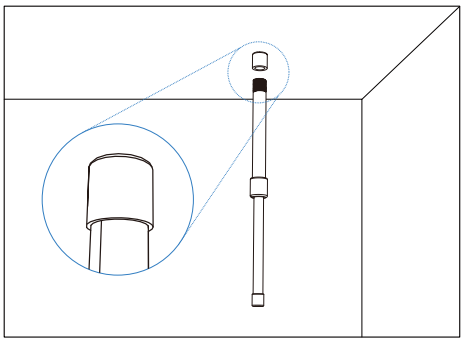

4 Spin the telescopic rod into ceiling accessory

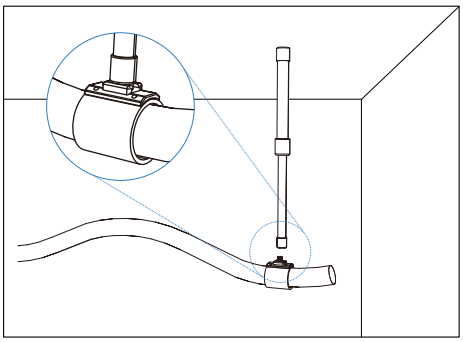

5 Move PC accessory under the telescopic rod and connecting

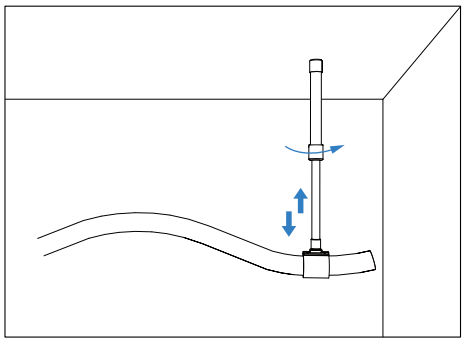

6 Spin the middle part to lock after adjusting the height

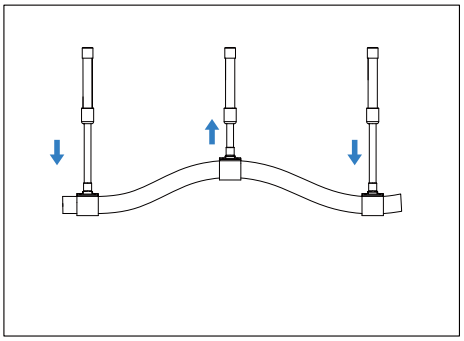

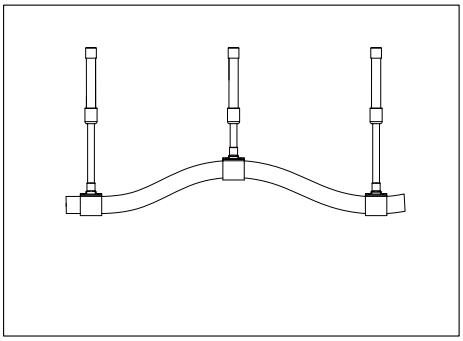

LD1051835 (Steel Rope Ceiling)
Installation Steps

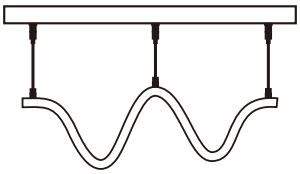

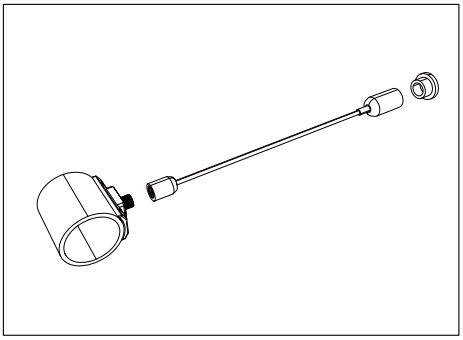

1 Accessory picture

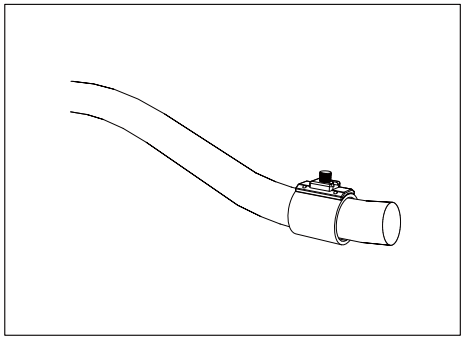

2 Put the PC accessory into the tube

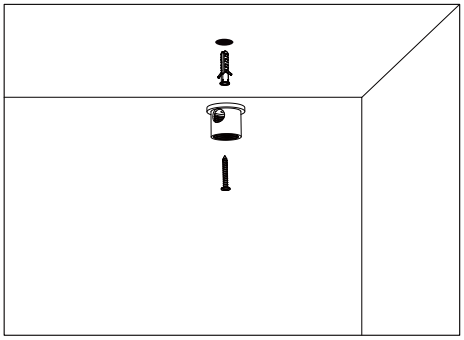

3 Fix accessory as picture in installation placement

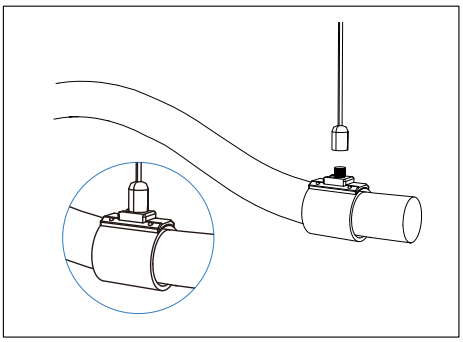

4 Move PC accessory under the telescopic rod and connecting

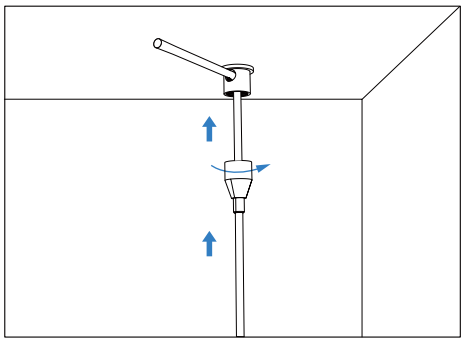

5 Spin the telescopic rod into ceiling accessory

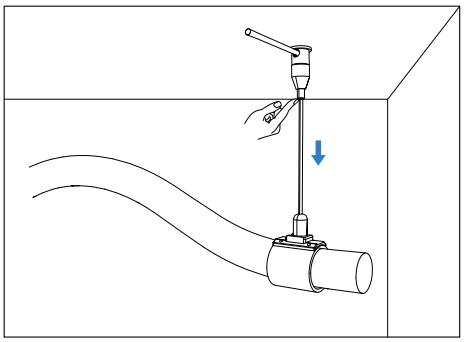

6 Press the elastic head and pull downwards to readjust the height

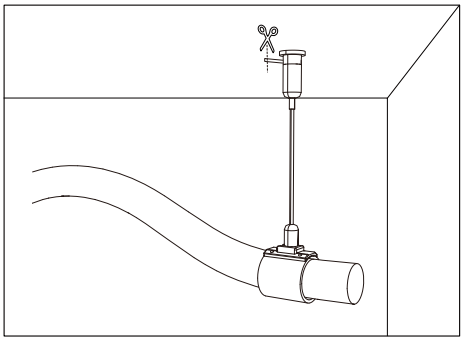

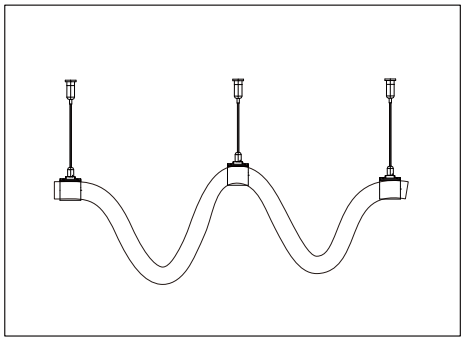

7 Cut off the exposed steel rope

LD1051836 (Wall Mounting)
Installation Steps



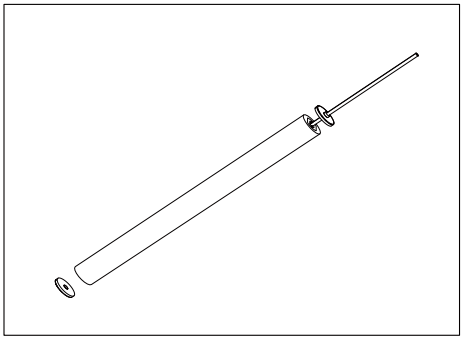

1 Product picture

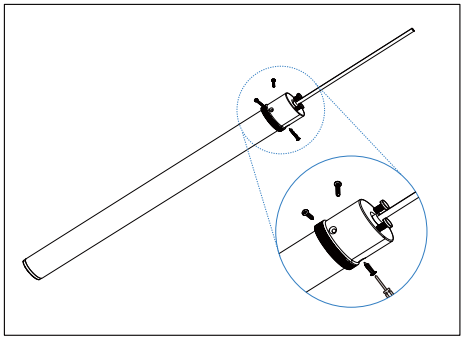

2 Put accessories into the tube and fix with screws

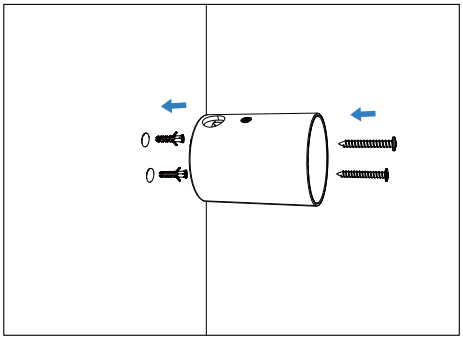

3 Fix accessory as picture in installation placement

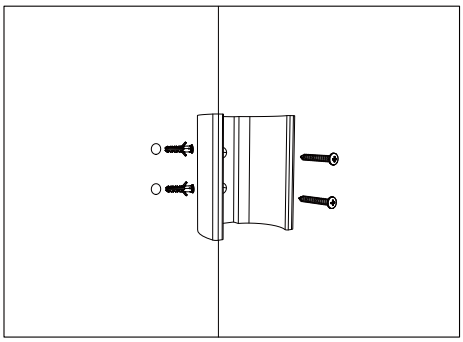

4 Install mounting clips

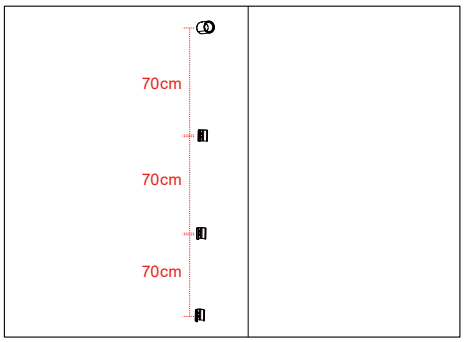

5 The minimum distance between mounting clips

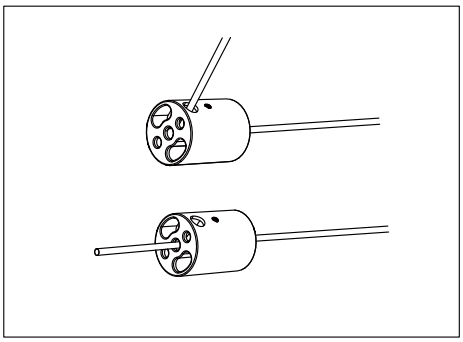

6 Optional vertical or lateral installation of the ceilding head

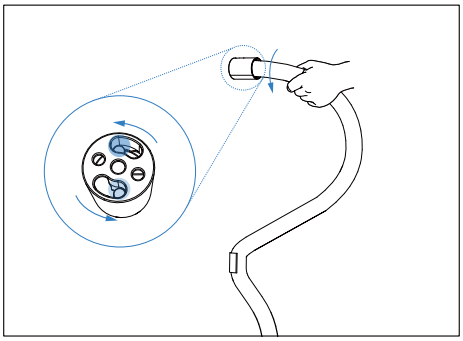

7 Put the tube into installed accesssory

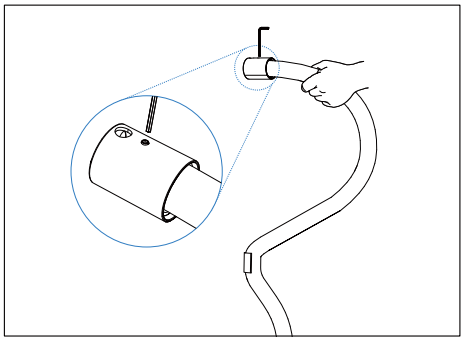

8 Tighten accessory and tube with screws

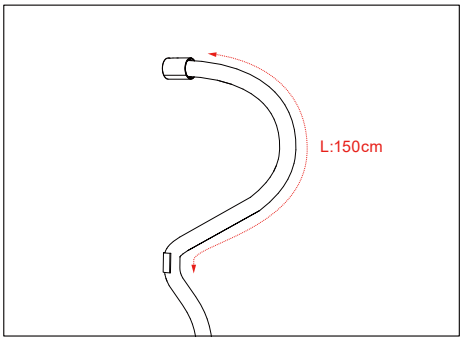

9 Press the tube into mounting clips from top to botom

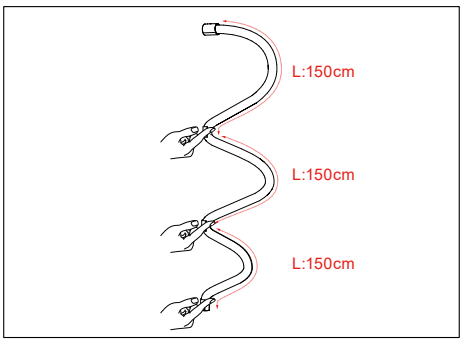

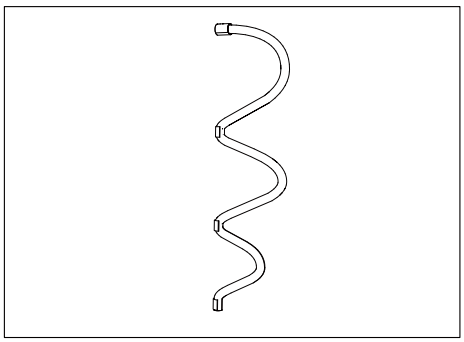

10 Put the tube into installed accessory at the bottom