LD1051829 (Vertical ceiling)
Installation Steps

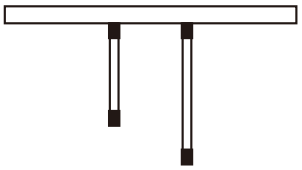

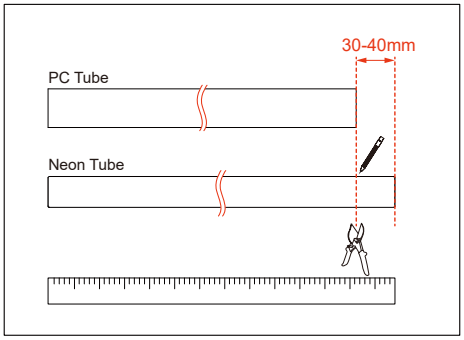

1 Attention: length of PC Tube should be 30~40mm less than Neon Tube

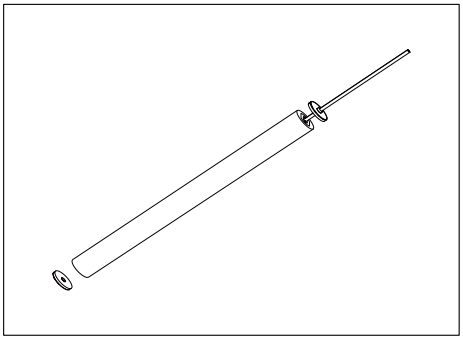

2 Seal endcaps on both sides with glue

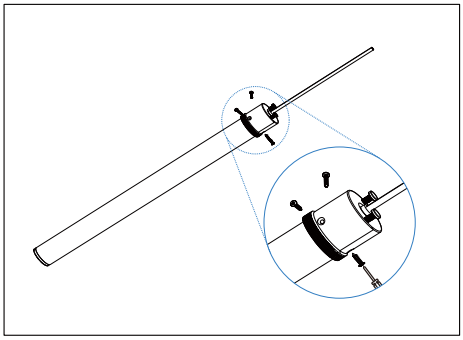

3 Fix metal outer endcaps by screws in wire side

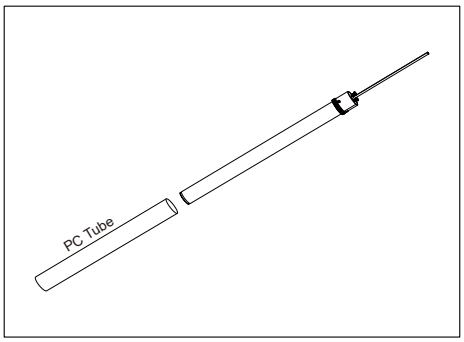

4 Put the matching PC tube

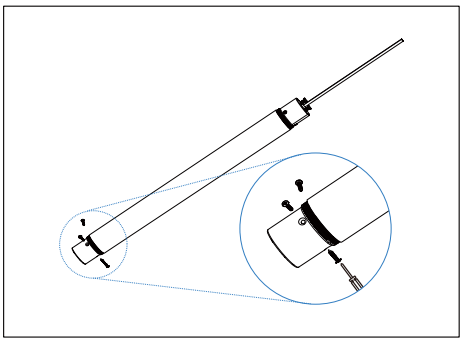

5 Fix tightly with metal encaps on other side by screws

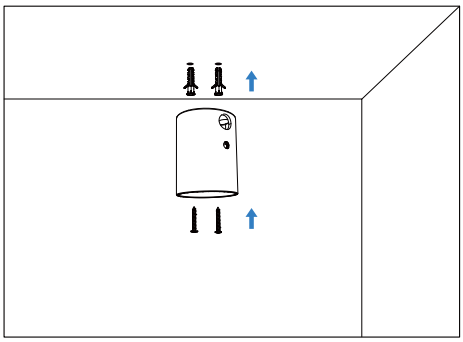

6 Fix the ceiling metal head by screws in ceiling

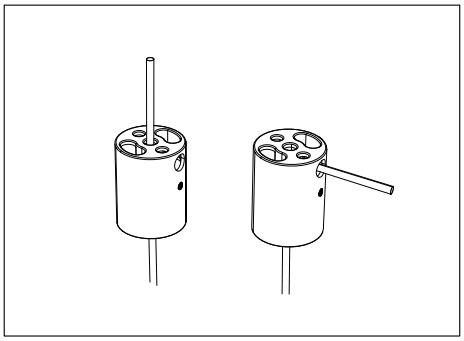

7 Optional vertical or lateral installation of the ceilding head

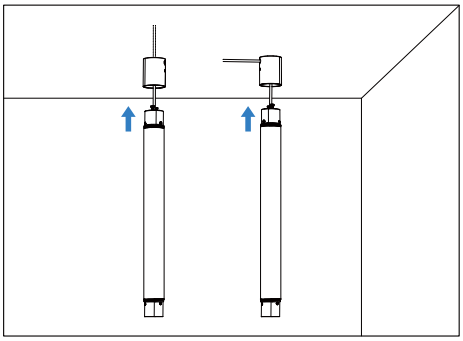

8 Put the finished product into fixed ceiling head

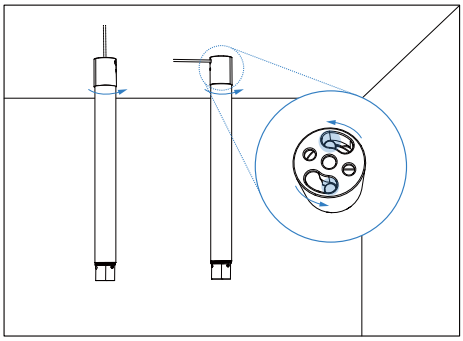

9 Spin the tube to completely match for the inner clasp to avoid product falling off

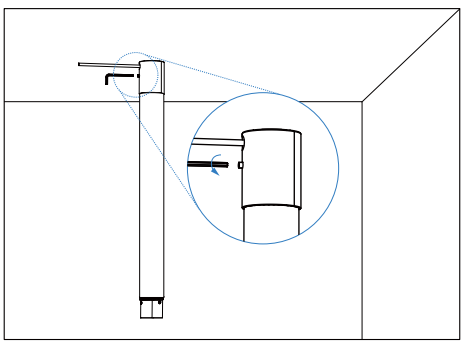

10 Tighten the screws

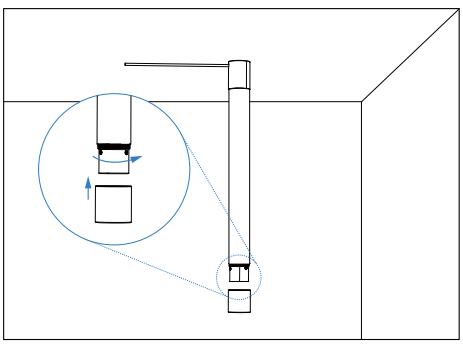

11 Spin metal endcaps on button to be attached firmly

