LD1051830 (Vertical hoisting)
Installation Steps

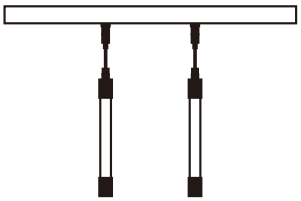

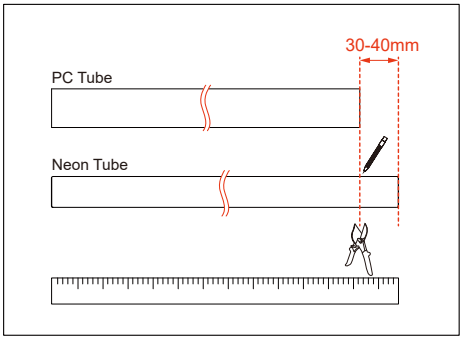

1 Attention: length of PC Tube should be 30~40mm less than Neon Tube

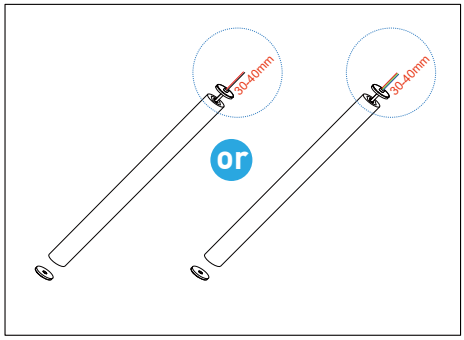

2 Insatllation is easier with 30~40mm 2P cable

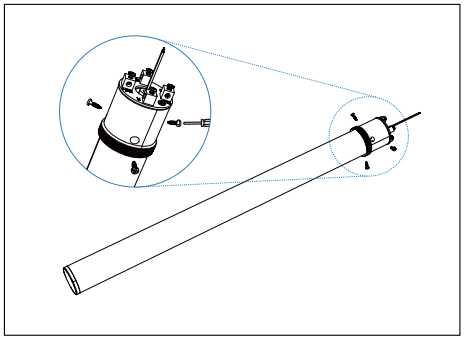

3 Fix accessory into the tube by screws

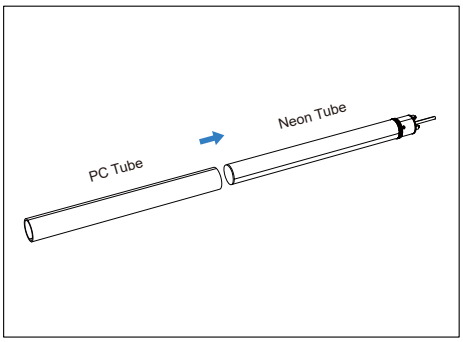

4 Put the matching PC tube

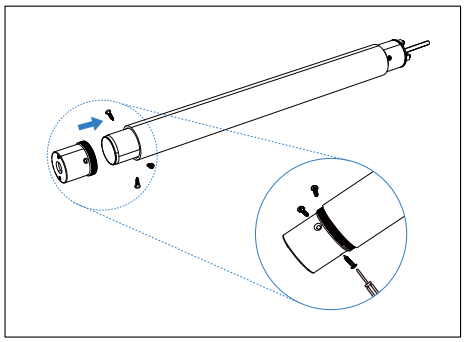

5 Fix tightly with metal encaps on other side by screws

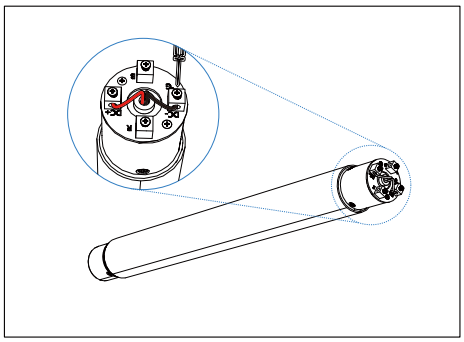

6 Peel the cable and put them through corrent pole holes

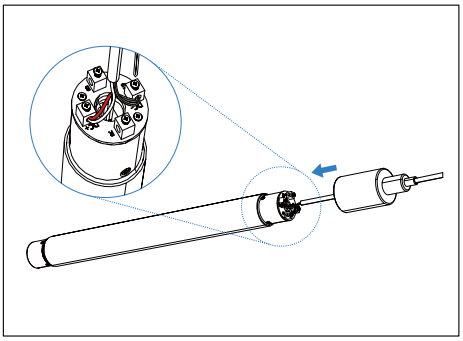

7 Peel the cable and put them through corrent pole holes

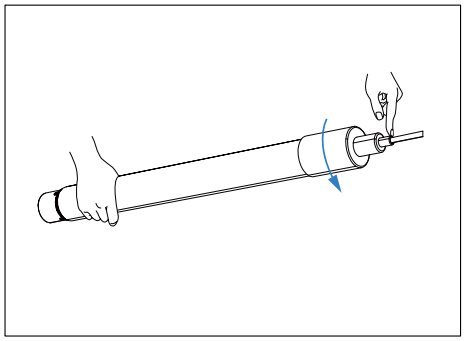

8 Press the elastic head to the lowest and spin the tube in

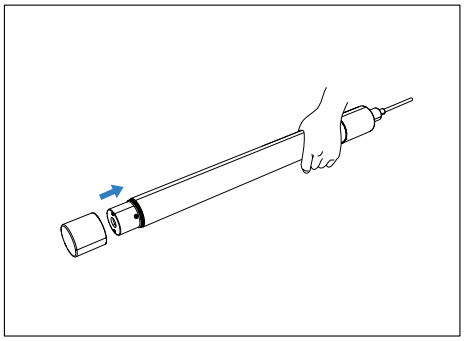

9 Spin the button endcaps to firmaly attach to the tube

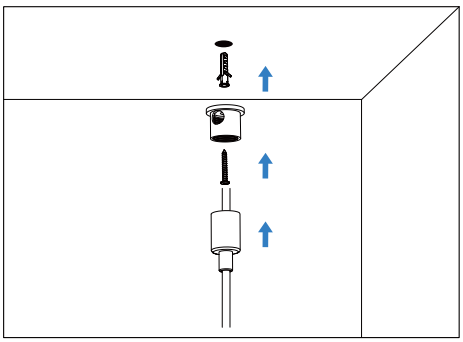

10 Take apart the wire locker and put the cable through the head

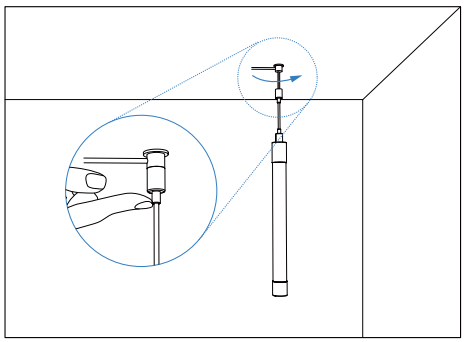

11 Fix the top of wire locker to ceiling by screws and tighten accessories after putting through out the cable

