LD1051833 (Round hoisting)
Installation Steps

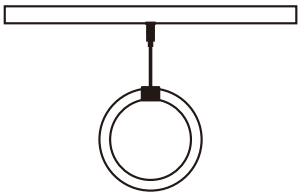

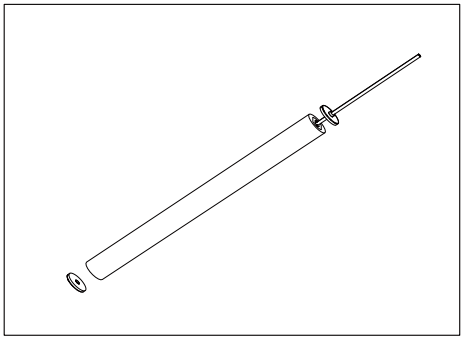

1 Product picture

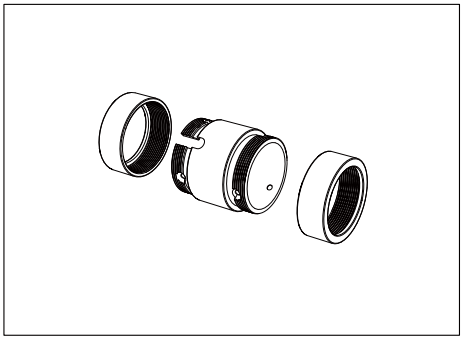

2 Spin to the limit

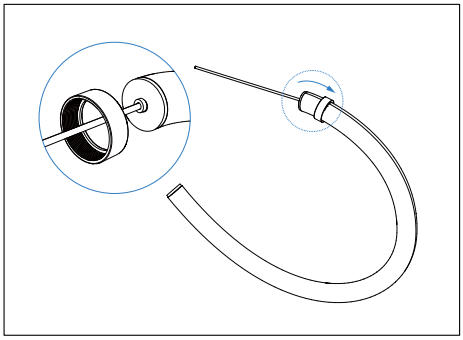

3 Put the small accessory into the tube

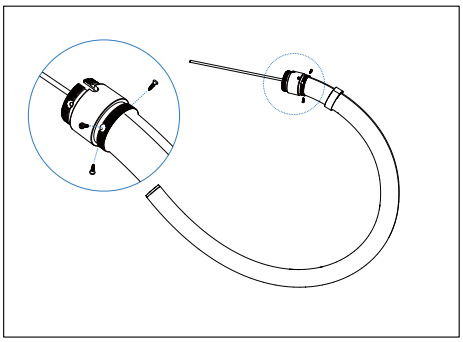

4 Put the accessory into the tube according to direction as picture and tighten them

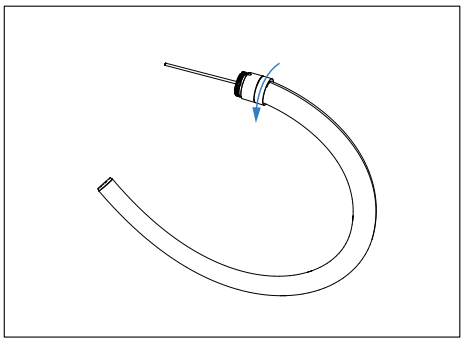

5 Lock small pieces firmly into the main accessories

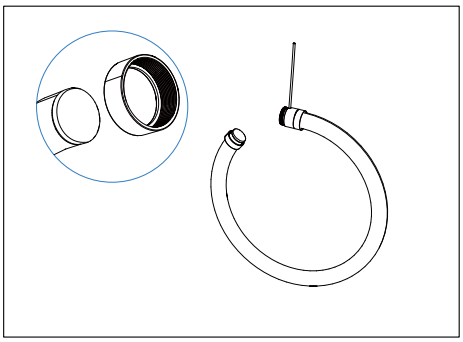

6 Put the small pieces into other side

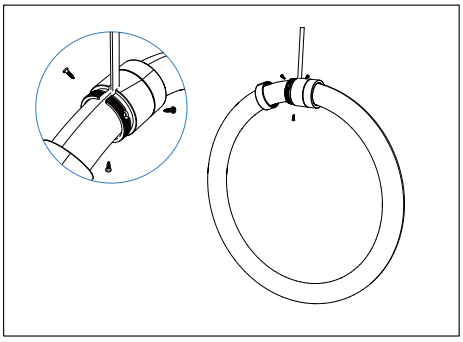

7 Plug the cable into wire hole and lock it

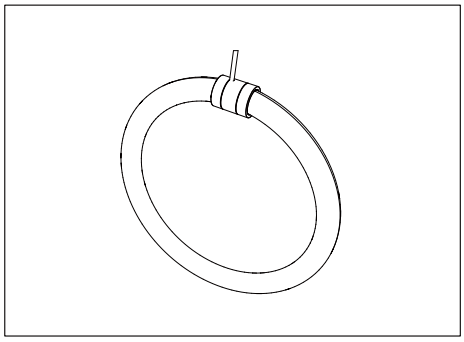

8 Tighten small piece of another side into main accessory

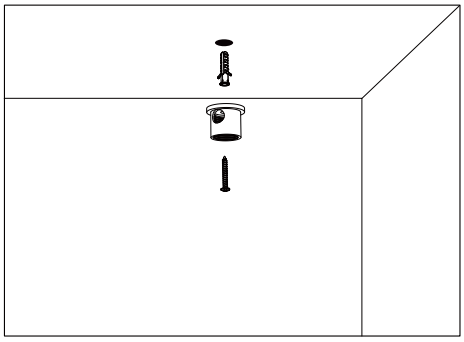

9 Take apart the wire locker and install in ceiling

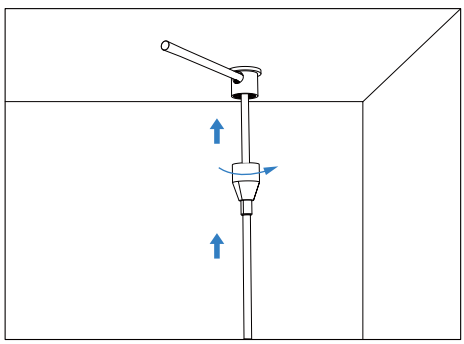

10 Put the cable through holes one by one

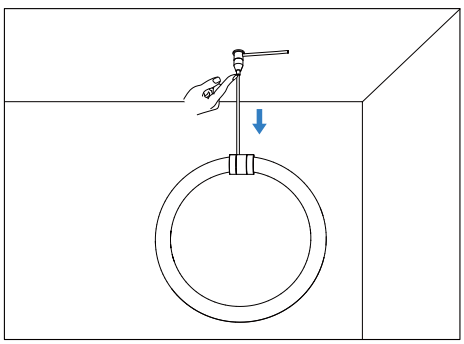

11 Press the elastic head and pull downwards to adjust the height

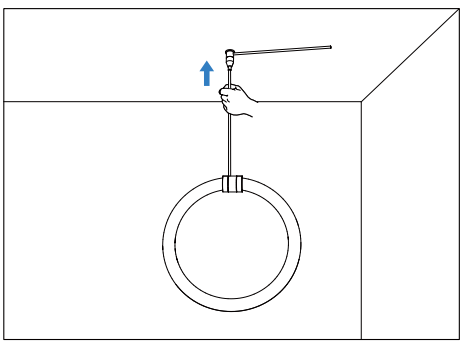

12 Press the elastic head and pull upwards to lock it