LD1051835 (Steel Rope Ceiling)
Installation Steps

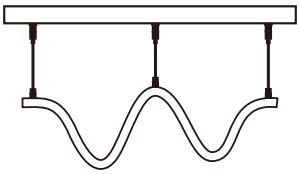

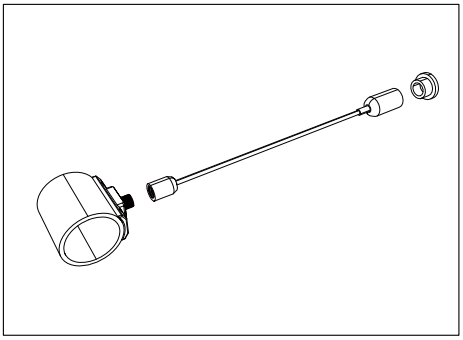

1 Accessory picture

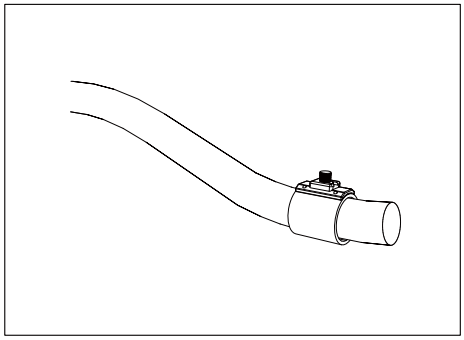

2 Put the PC accessory into the tube

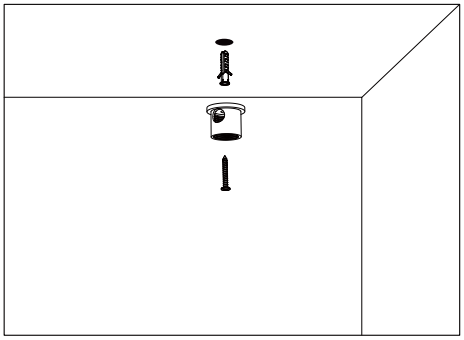

3 Fix accessory as picture in installation placement

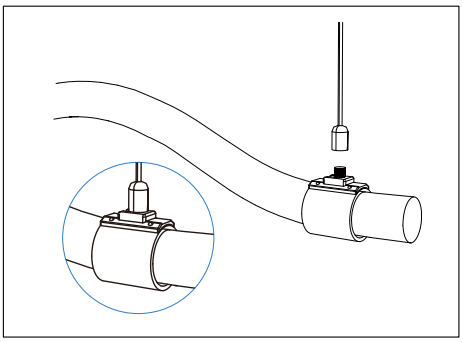

4 Move PC accessory under the telescopic rod and connecting

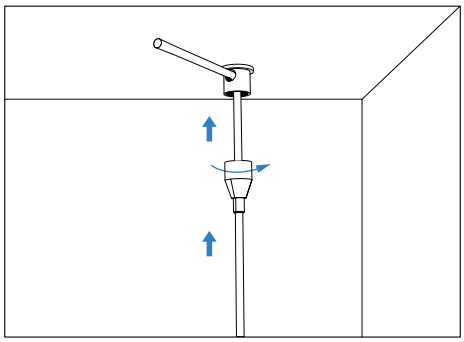

5 Spin the telescopic rod into ceiling accessory

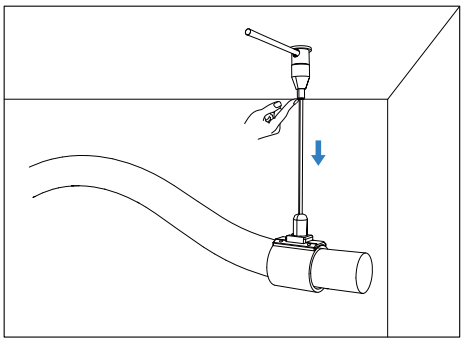

6 Press the elastic head and pull downwards to readjust the height

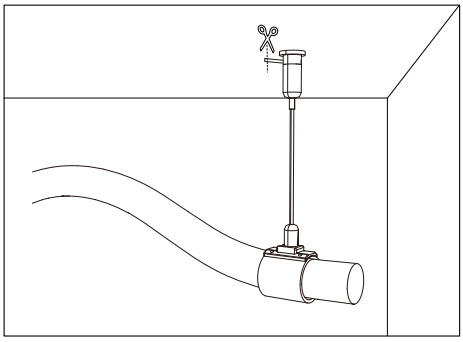

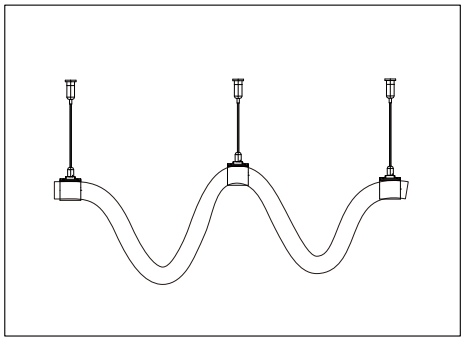

7 Cut off the exposed steel rope