LD1051836 (Wall Mounting)
Installation Steps



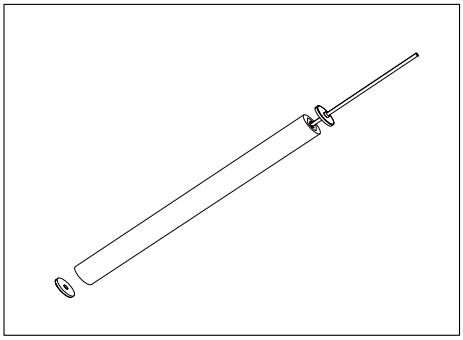

1 Product picture

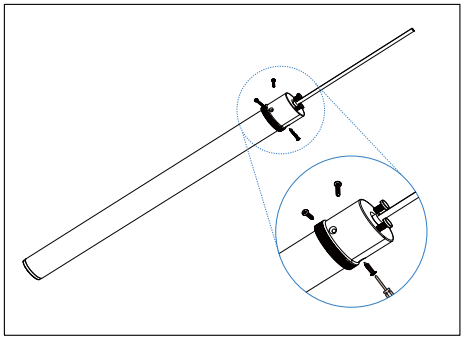

2 Put accessories into the tube and fix with screws

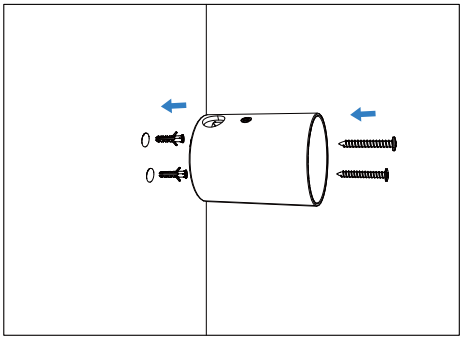

3 Fix accessory as picture in installation placement

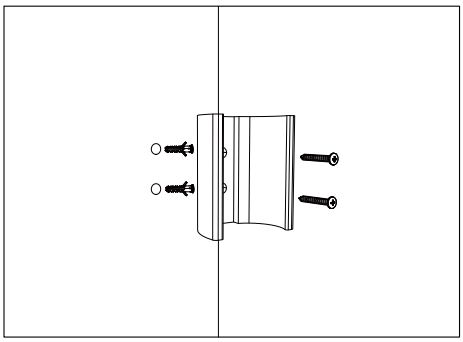

4 Install mounting clips

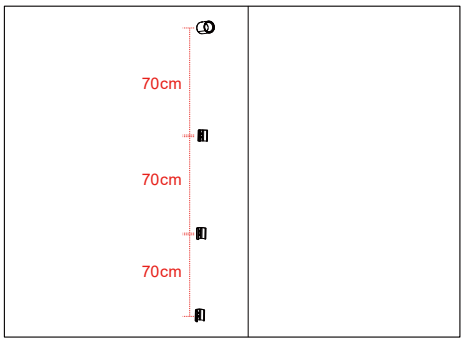

5 The minimum distance between mounting clips

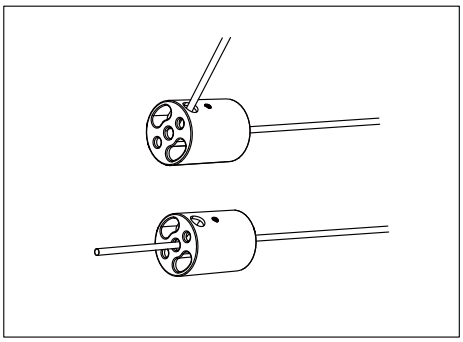

6 Optional vertical or lateral installation of the ceilding head

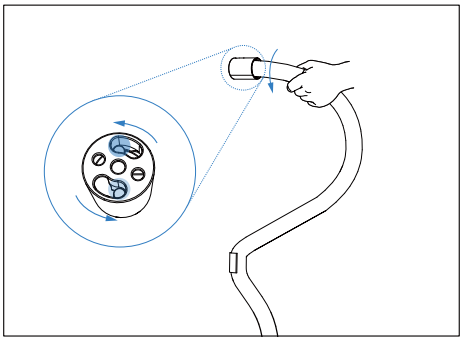

7 Put the tube into installed accesssory

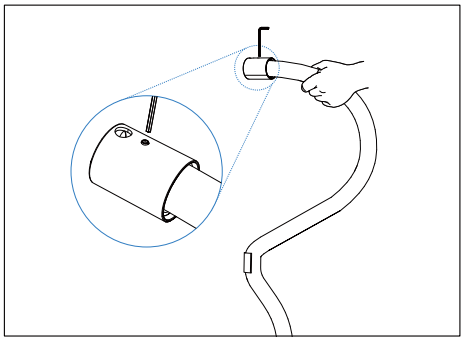

8 Tighten accessory and tube with screws

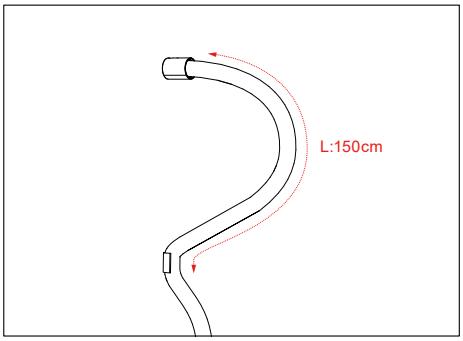

9 Press the tube into mounting clips from top to botom

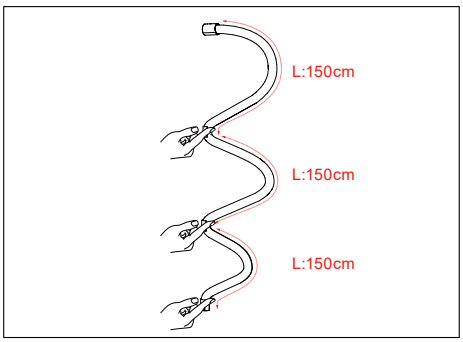

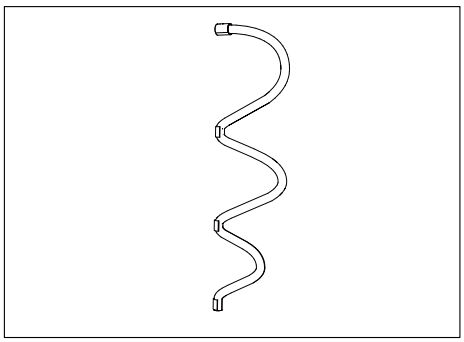

10 Put the tube into installed accessory at the bottom