LEDBOX®

www.ledbox.es



NEON FLEX

Silicone Tube 0612

Product specification

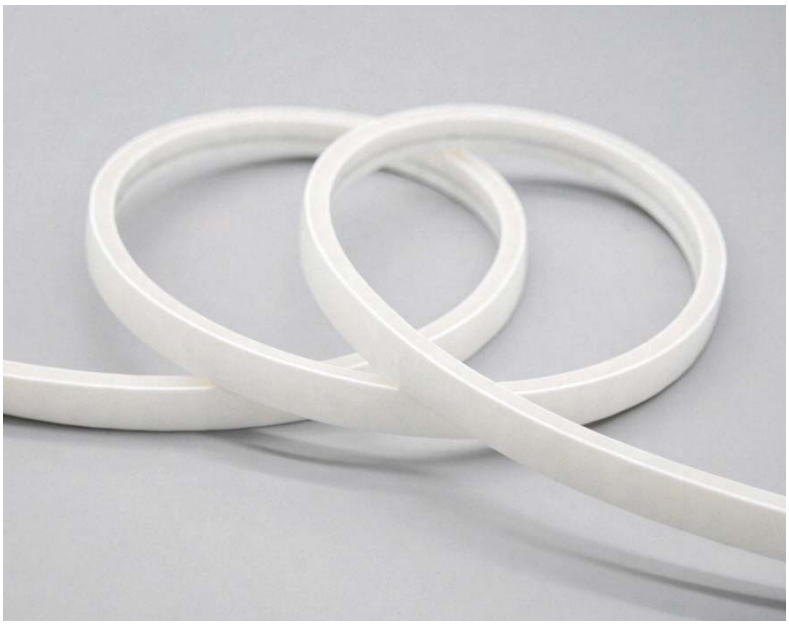





Product Features

- Anti-yellowing and heat resisting silicon glue, chemical resistance acid and alkaline, available for extremely terrible outdoor environment.
- Uniform and soft luminance, no light spot.
- Super brightness large chip, golden wire welded and copper led holder for quicker heat dissipation, higher stability, longer life span.
- Leadless SMT technique(RoHS certificated), smooth welding joint, firm connection of led and pcb.

LED strip Colloid specifications comparison

Materials / Main parameters	Silicone flexible led strip	PVC flexible led strip	Notes
Colloid features in -40℃	No crack after 30 days	Totally cracked	The low temperature resistant of silicone is superior than PVC or epoxy materials
Colloid features in 120℃	No obvious change after 72 hours	Colloid changed into yellow and deformed after 2 hours	The high temperature resistant of silicone is superior than PVC or epoxy
Colloid features in 180℃	No obvious change after 72 hours	Colloid changed into brown and some melted after 20 minuts	Over 150℃, PVC is easily hydrolyzed, Viscosity becomes weaken and easily seperated
Steadily lighted in Seawater for 72 hours	No obvious change	Serious atomization on the surface	The waterproof grade of silicone led strip can reach to IP67, high resistance to acidic alkali and salt properties
Thermal conductivity	Good thermal conductivity	No thermal conductivity	Pvc and epoxy cannot conduct heat, while silicone has good thermal conductivity

Structure & Spec.

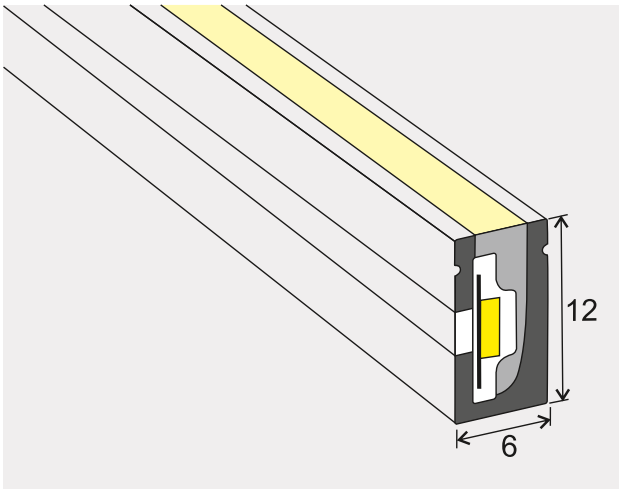

Size(mm)

Voltage（V）	24
Watt（W/M）	10
CCT（K）	2400
Luminous（LM）	>240
Luminous Efficiency（LM/W）	>24
CRI（RA）	>80
Size(MM)	6*12mm
N.W.(G/M)	94
Working Temperature	-20~50 ℃
IP Grade	IP67

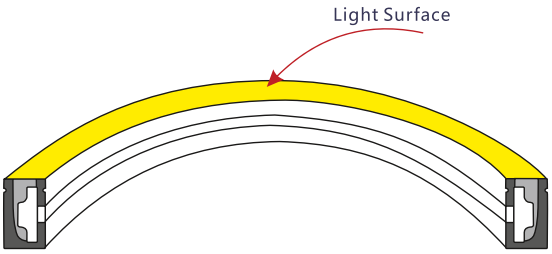

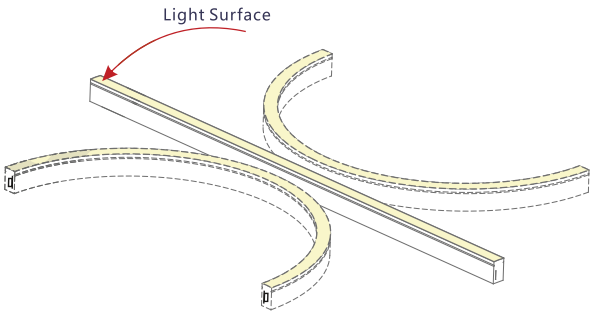

Do not bend smaller than allowed minimum bend diameter.

End caps:

1, Straight cable output:





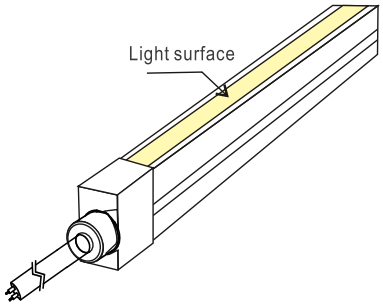

Connects light to power supply with pre-installed end feed cable, IP67. Cable length available in 0.2m,1m, 2m etc.

2, Cable output from side:



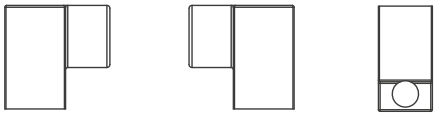

Connects light to power supply with pre-installed end feed cable, IP67. Cable length available in 0.2m,1m, 2m etc.

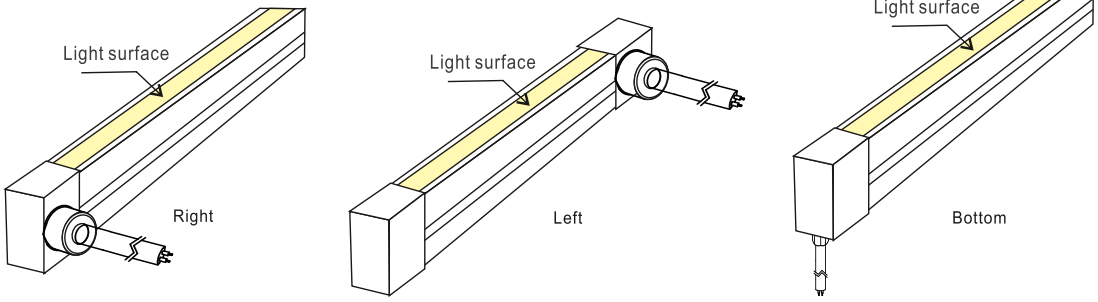

3, End caps without hole:





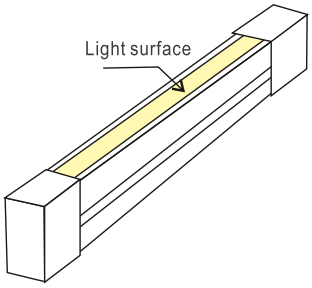

Announcements

Please notice that the strips are not bendable to all directions. As the appropriate specific shape and degree, please follow the following instruction:

Correct bending way

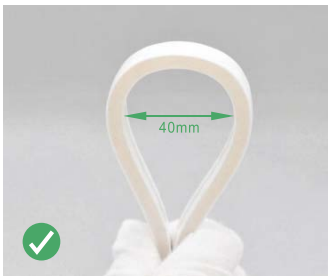

Face to the light surface, fold the strip, the minimum bending diameter is 40mm

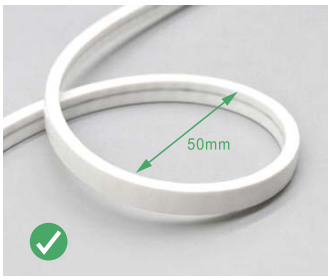

Light surface upwards, the strip is bendable to right or left naturally, the minimum bending diameter is 50mm

Incorrect bending way

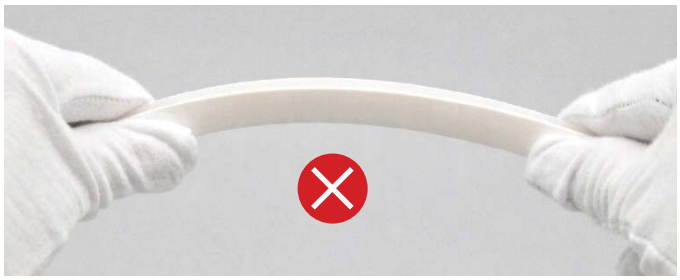

Face to the side surface,(as the picture shows) Do not bend downward to damage the strip.

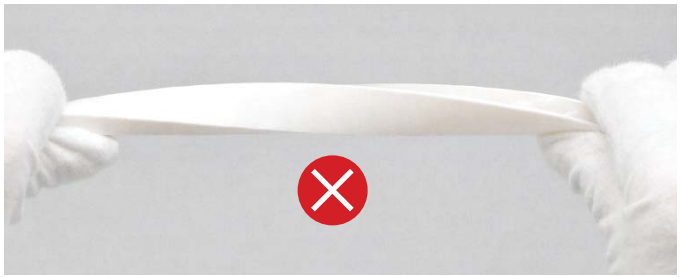

(as the picture shows) please do not twist the strip, or it will be damaged

- LED strips are low voltage products, you must use the power supply(transformer). Do not connect the led strip directly to the AC 110v or AC 220v, otherwise it will burn out the LED strips and lead to safety (security)accidents.

- Please read the specifications thoroughly before installation by professional staff to make sure the safe use.