User Guide

RGBW/RGB/CCT/Dimming
4 Channel LED RF Controller



Technical parameters

- Input voltage: 12-24VDC
- Output type: PWM constant voltage
- Output current: max 6A/CH, Total max 15A
- Grey levels: 4096/CH
- Dimming range: 0-100%
- Remote distance: 30m
- Working temperature: -30℃~55℃
- Product size: L114×W38×H20mm
- Net weight: 53g

Summary

- Mini style LED controller with DC power socket input and 4 channel constant voltage output.
- Default as RGB/RGBW controller, need match RGB/RGBW remote, create colorful static or dynamic effect.
- Can also be used as color temperature or dimming controller, good compatibility.
- Full compatibility with a variety of single color, dual color and RGB/RGBW remote.
- Smooth dimming and switch without any flickering.
- When control RGB/RGBW light, built in 10 mode, include jump or gradual change style.
- Adopt 2.4GHz wireless technology, can accept up to 10 remote control.
- Auto-transmitting function, one receiver can transmit the signal from the remote to another receiver within 15m, so the remote control distance can be beyond 100m.
- Auto-synchronization function, different receivers can work synchronously when they are controlled by the same remote, under same dynamic mode and same speed.
- Can be WiFi controlled by APP installed on IOS or Android mobile devices while working with WiFi-Relay controller.
- User can customize own RGB change mode list by APP for advanced function.
- Can connect with unlimited number of 4CH CV or CC power repeaters in series or in parallel to expand output power, achieve synchronous control effect.

Dimension

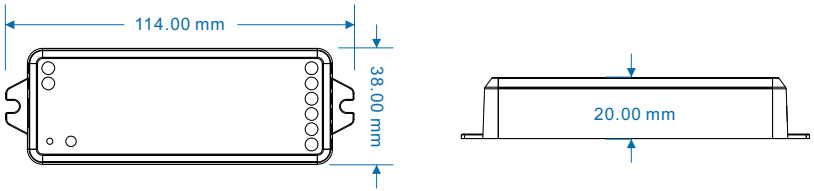

Interface specification

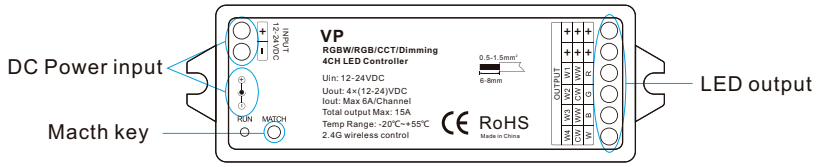

Match guide

VP receiver match with all kinds of single or multiple zone 2.4G RF remote controller.

After match different color RF remote, the receiver become the same color controller.

Use Match key

1. Match: Short press match key, within 5s, press on/off key or zone key of the remote.
2. Delete: Long press match key for 5s, delete all matched remote.
3. Multiple zone remote only use zone key to match each zone receiver.

Use Power-up

1. Match: Switch off the power, then switch on power again,
   short press on/off key or zone key 3 times on the remote quickly within 5s after power on,
   the link is done once the light blinks 3 times.
2. Delete: Switch off the power, then switch on power again,
   short press on/off key or zone key 5 times on the remote quickly within 5s after power on,
   the unlink is done once the light blinks 5 times.
3. Multiple zone remote only use zone key to match each zone receiver.

Wiring diagram

VP for RGBW

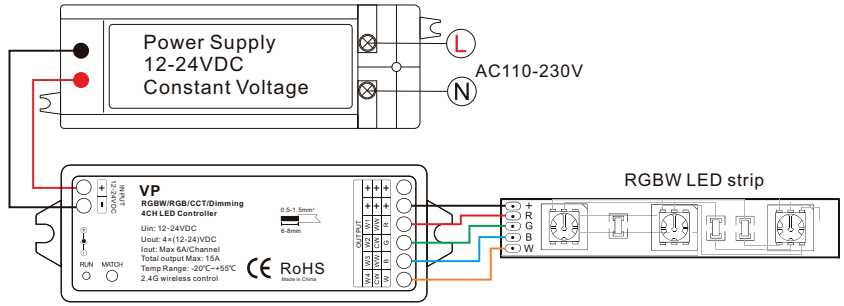

VP for dual color

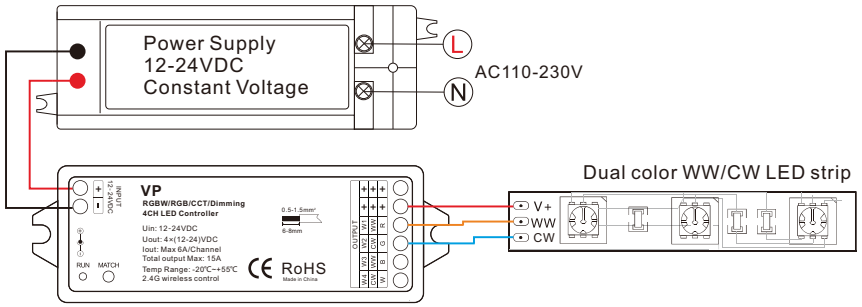

VP for single color

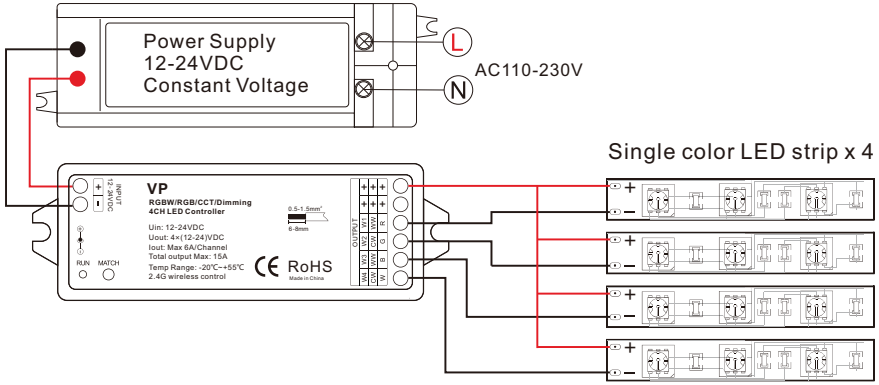

RGB change mode list

No.	Name	No.	Name
1	RGB jump	6	RGB fade in and out
2	RGB smooth	7	Red fade in and out
3	6 color jump	8	Green fade in and out
4	6 color smooth	9	Blue fade in and out
5	Yellow cyan purple smooth	10	White fade in and out

Malfunctions analysis & troubleshooting

Malfunctions	Causes	Troubleshooting
No light	1. No power. 2. Wrong connection or insecure.	1. Check the power. 2. Check the connection.
Wrong color	1. Wrong connection of R/G/B/W wires.	1. Reconnect R/G/B/W wires.
Uneven intensity between front and rear,with voltage drop	1. Output cable is too long. 2. Wire diameter is too small. 3. Overload beyond power supply capability. 4. Overload beyond controller capability.	1. Reduce cable or loop supply. 2. Change wider wire. 3. Replace higher power supply. 4. Add power repeater.
No response from the remote	1. The battery has no power. 2. Beyond controllable distance. 3. The controller did not match the remote.	1. Replace battery. 2. Reduce remote distance. 3. Re-match the remote.

Safety information

1. The product shall be installed and serviced by a qualified person.
2. This product is non-waterproof. Please avoid the sun and rain.
3. Good heat dissipation will prolong the working life of the controller, please ensure good ventilation.
4. Please check if the output voltage of any power supplies used comply with the working voltage of the product.
5. Ensure all wire connections and polarities are correct and secure before applying power to avoid any damages to the LED lights.
6. If a fault occurs please return the product to your supplier. Do not attempt to fix this product by yourself.