LD1051526

LED 0-10V Dimmer

0-10V dimmer adopts the advanced micro control unit, It can receive the 0-10V analog control signal which is internationally widely used. It changes the signal into PWM control signal to actuate the LED lamp. Dimming range from 0-100%, stable and soft.

Product Feature

- Adopt the advanced micro unit.
- Receive the 0-10V analog control signal which is internationally widely used.
- PWM control signal to actuate the LED lamp, dimming from 0-100%,stable and soft.
- PWM signal frequency:2KHz.
- Output gray,4096 levels.

Technical Parameters

Working temperature	-20-60℃
Supply voltage	12V~24V
Output	1 channel
External dimension	L127*W42*H33 (mm)
Packing size	L135*W55*H40 (mm)
Net weight	150g
Gross weight	170g
Output gray	4096 levels
Max. Output current	<25A
Control standard	0-10V analog signal
0-10V signal consumption	<0.1mA
Dimming range	0-100%
PWM frequency	2KHz

Interface Specifications

0-10V analog signal input/output interface:

Power and Payload interface:

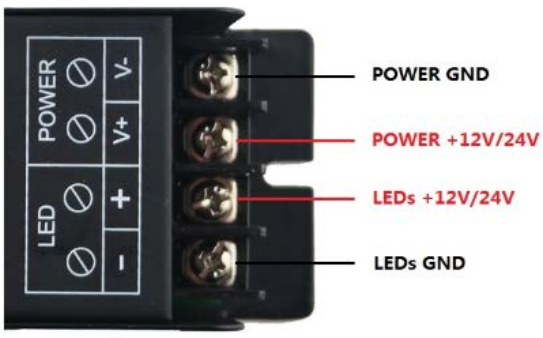

Typical Applications

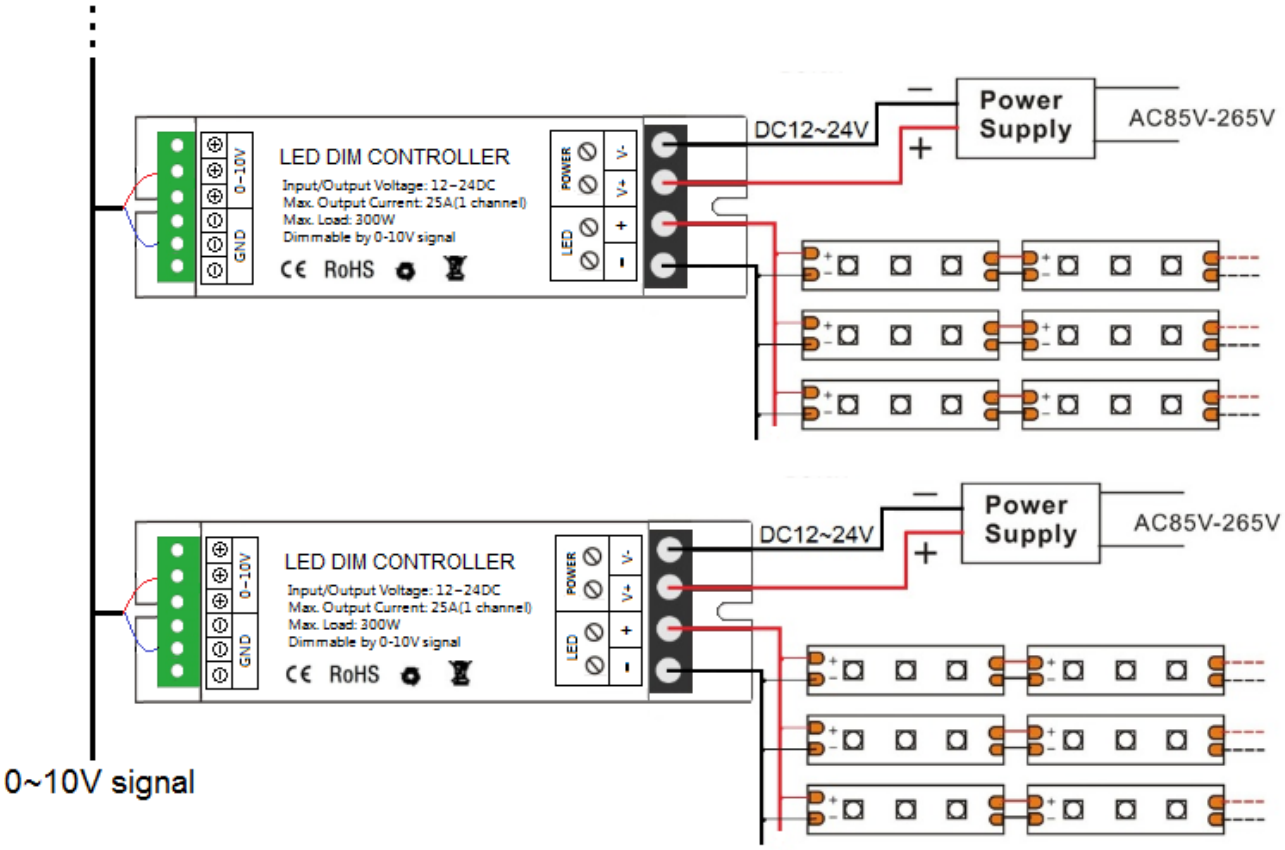

Product information for placing order

Product name	Item number
LED 0-10V Dimmer	HX-SZ200(0-10V)