20W-12V/24V LED Waterproof Power Supply(C&V)

- Protections:short circuit/over load/over voltage/over temperature
- IP67 design for indoor or outdoor installation
- It can be used in dry ,wet and rainy environment
- Cooling by free air, high reliability
- 100% full load burn-in test
- Suitable for internal lights application for Ⅰ/Ⅱ/Ⅲ.
- Widely used in LED lighting and IT equipment
- Compliance to worldwide safety regulation for led lightings.



IS 15885(Part2/Sec13) R - 41065080 www.bis.gov.in

RoHS

CE SELV IP67

High Reliability | Over-heat Protection | Short Circuit Protection | Over Load Protection | Over voltage protection

Specification

Model		YSD-20WHA-12	YSD-20WHA-24
OUTPUT	Output voltage	12VDC	24VDC
	Output voltage range	12VDC±0.5VDC	24VDC±0.5VDC
	Output current	Max 1.7A	Max 0.83A
	Output power	Max 20W	
	Output power range	0~20W	
	Ripple & Noise	≤120mV	≤240mV
	Linear Regulation	±1%	
	Load Regulation	±1%	
	Start-up Time (Typ)	500ms/230VAC 700ms/115VAC	
	Hold Up Time(Typ)	100ms/230VAC 100ms/115VAC	
INPUT	Input voltage	100-264Vac	
	Frequency	50/60Hz	
	Input current	0.19A/230Vac or 0.32A/115Vac	
	Power factor	PF>0.6	
	No-load power consumption	< 3W	
	Efficiency (typ.)	83%	85%
	Inrush current(typ.)	Cold start 45A at 230Vac	
	Control surge capability	L,N:2KV L,N-PE:4KV	
	Leakage current	Max. 0.5mA	
ENVIRONMENT	Working temperature	ta: -30°C~ 50°C tc: 80°C	
	Working humidity	20 ~ 99%RH, condensing(Waterproof)	
	Storage temp., humidity	-40°C ~ 80°C, 10~95%RH	
PROTECTION	Overtemperature	Protection type: Turn off the output voltage, after the temperature drops, re-energize to restore.	
	Over load protection	Shut down the output when current load ≥110%~150%, auto recovers.	
	Short circuit protection	Protection type: It can be automatically restored after the fault is eliminated.	
SAFETY & EMC	Withstand voltage	I/P-O/P:3750Vac	
	Isolation resistance	I/P-O/P: 100MΩ/500VDC/25°C/70%RH	
	Safety standards	IEC/EN61347;IEC/EN60950;IP67	
	EMC Test Standards	EN55015 : 2013;EN61547 : 2009; EN61000-3-2:2014; EN61000-3-3:2013	
Reliability and Quality Control	Impact aging	100% of the product is fully loaded and impacted for 4 hours under an environment of at least 40°C±5°C	
	Component derating	Under the steady-state conditions of rated input and output, the stress of components will not exceed its maximum nominal value	
NOTE	1. All parameters not specifically mentioned are measured at 230VAC input, rated load and 25°C ambient temperature. 2. Ripple and noise test method: connect 0.1uF and 47uF capacitors in parallel at the terminal, and measure under 20MHZ bandwidth. 3. Ensure that the power supply is used under the rated parameters and environment.		

Dimensions
Unit:mm

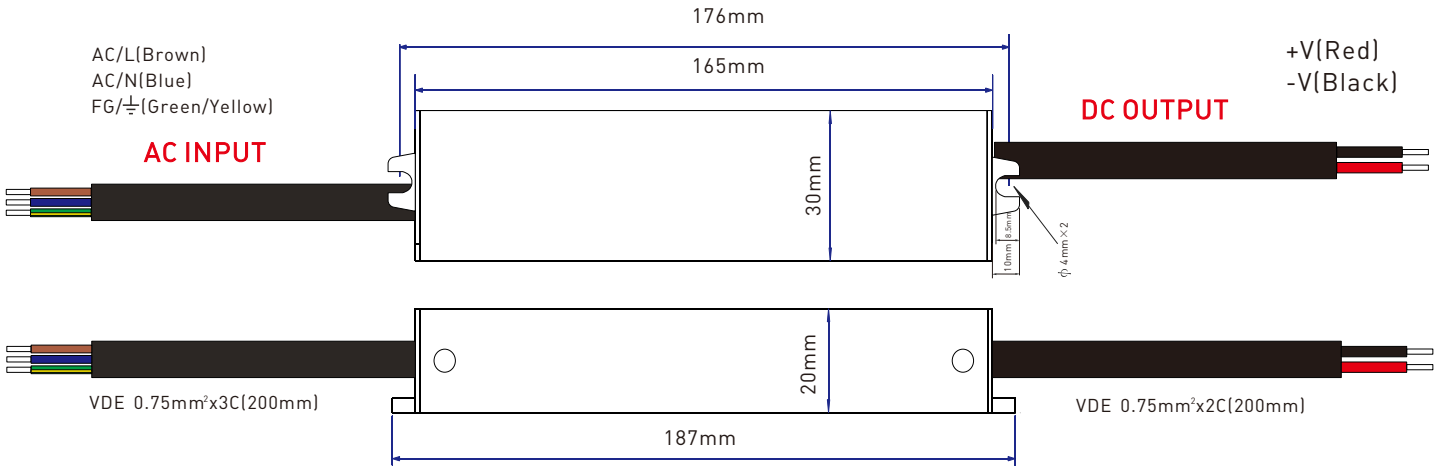

Relationship diagrams

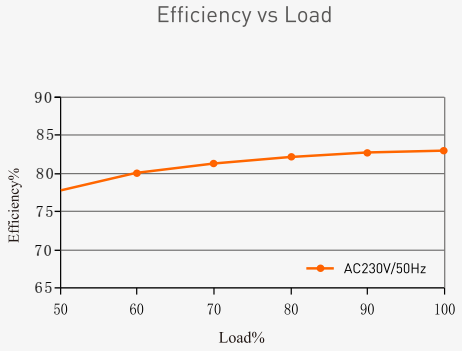

YSD-20WHA-12

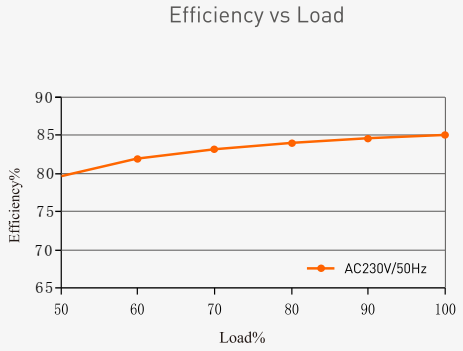

YSD-20WHA-24

Packaging Information

DIMENSION	187x30x20mm(LxWxH)
PACKING	240x37x37mm(LxWxH)
CARTON QUANTITY	50PCS
CARTON SIZE	400x250x205mm(LxWxH)
WEIGHT	205g±10g/PCS

Temperature load curve

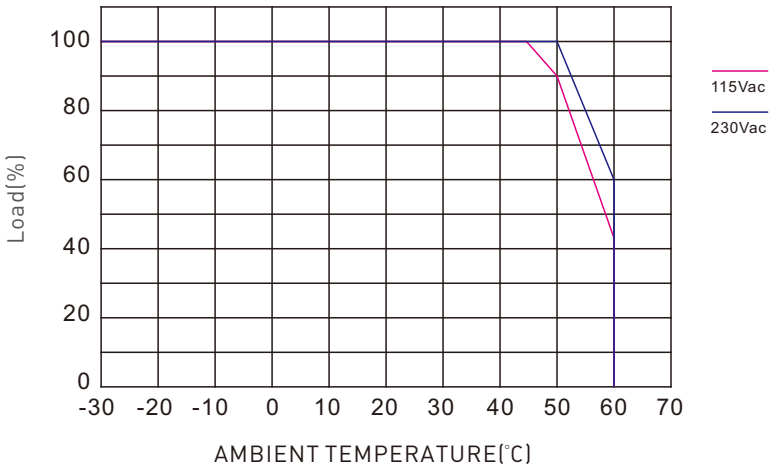

* No further notice if any changes in the manual. Product function depends on the goods. Please feel free to contact your supplier if any question. www.szysdwps.com