DALI Multi-functional Senor

Production specification



Contents

1.Summary.....2

2.technical parameters.....2

3.external dimension.....2

4.operating instruction.....3

5.using instruction.....3

6.typical applying.....4

1.Summary

DALI (Digital Addressable Lighting Interface) is an international standard, popular lighting control protocol, with digital addressing dimming, stable, various dimming ways, easy to install, compatible with many big factories such characteristic.

DALI multifunction sensor built-in human body induction and light induction, adopt advanced computer control chip, transfer these induction signal to DALI order to control DALI dimmer on bus, make the DALI system more intelligent.The sensor support our DALI touch screen controller and DALI network hosts use configuration software sensor parameters, and it's simple to use and more intelligent.

2.technical parameters

2.1 Working temperature: -20-60 ℃

2.2 Supply voltage: DALI whole power

2.3 Input signal: body induction, photo induction signal

2.4 Output signal: standard DALI signal

2.5 Input current: ≤9mA

2.6 Gross weight: 122.5g

2.7 Net weight: 78.5g

2.8 Packing sizes: L106 * W106 * H52mm

2.9 Check range of installing at 3-4 m high: 5-8 m

2.10 Setting range of illumination threshold: 10-650lx

3.external dimension:



Φ108.7mm

Picture of diameter size



side size

4.operating instruction

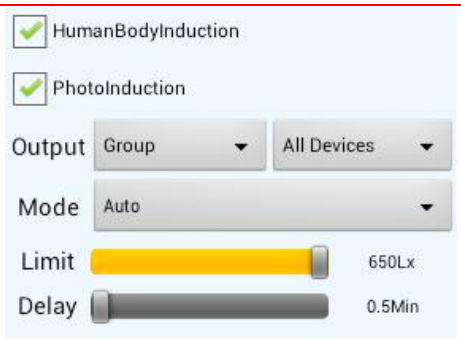

picture3 setting of touch screen of multi-functional sensor

4.1 choosing of body, light sense function: it can open and close the function of body sense and light sense, can close all to make sensor invalid.

4.2 output control setting : set output control single device or group or radio control of sensor

4.3 output mode control: set the output control mode of sensor to max, min, or automatic

4.4 set value of light sense threshold: 10—650lx;

4.5 set duration of timing: 30s—60min;

Note: set the factory default : body sense function is open, light sense function is open, output the address of control device is radio, control mode is max, illuminance threshold is 500lx, duration of delayed time is 2.5min.

5.using instruction

5.1. When set up the light induction control mode: when the outside light is less than the setting threshold , the control group of lamps will output the max and min value which set or it will control automatically(The sensor will increase and reduce the output of controlled lamp according to the current environment light value it measured). When the outside light continuous is greater than setting threshold and closed time over the set delay value, the control group of lamps will go out.

5.2. When set up the human body induction control mode: when induction for moving body, it will light up the control group of lamps and lanterns, when there is no sense to the human body movement, reaches the set delay time will control the lamps and lanterns is put out.

5.3. When set up the human body induction and light induction control mode: when the outside light is greater than the set threshold illuminance, human body induction is invalid; when the light is less than the set threshold illuminance, human body induction is effective.

Note: these three mode can be repeated triggered.

6.typical applying

Multi sensor can be set on one DALI wire and also can be activated by outside condition.

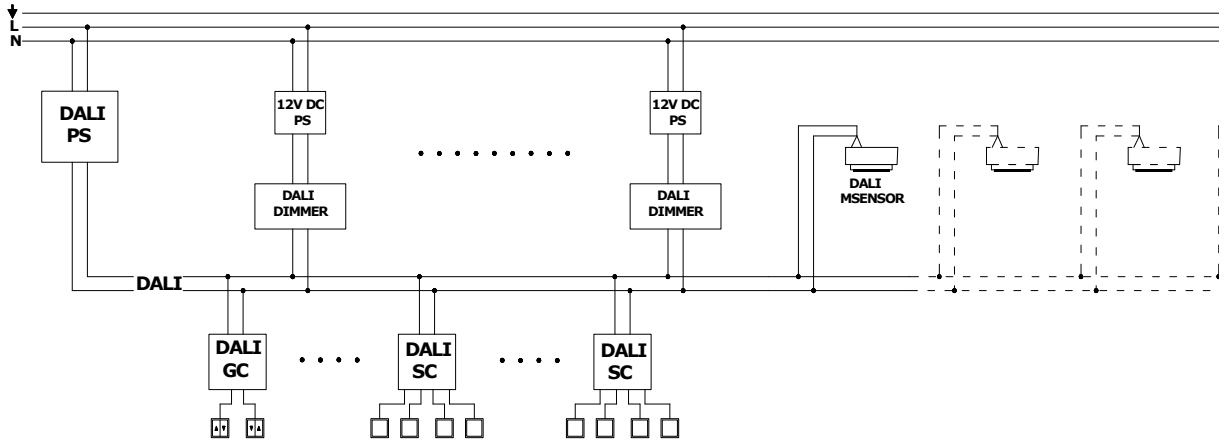
L
N
DALI
PS
12V DC
PS
12V DC
PS
DALI
DIMMER
DALI
DIMMER
DALI
MSENSOR
DALI
DALI
GC
DALI
SC
DALI
SC

Picture 4