LED PC SNOKE PRO **CCT**

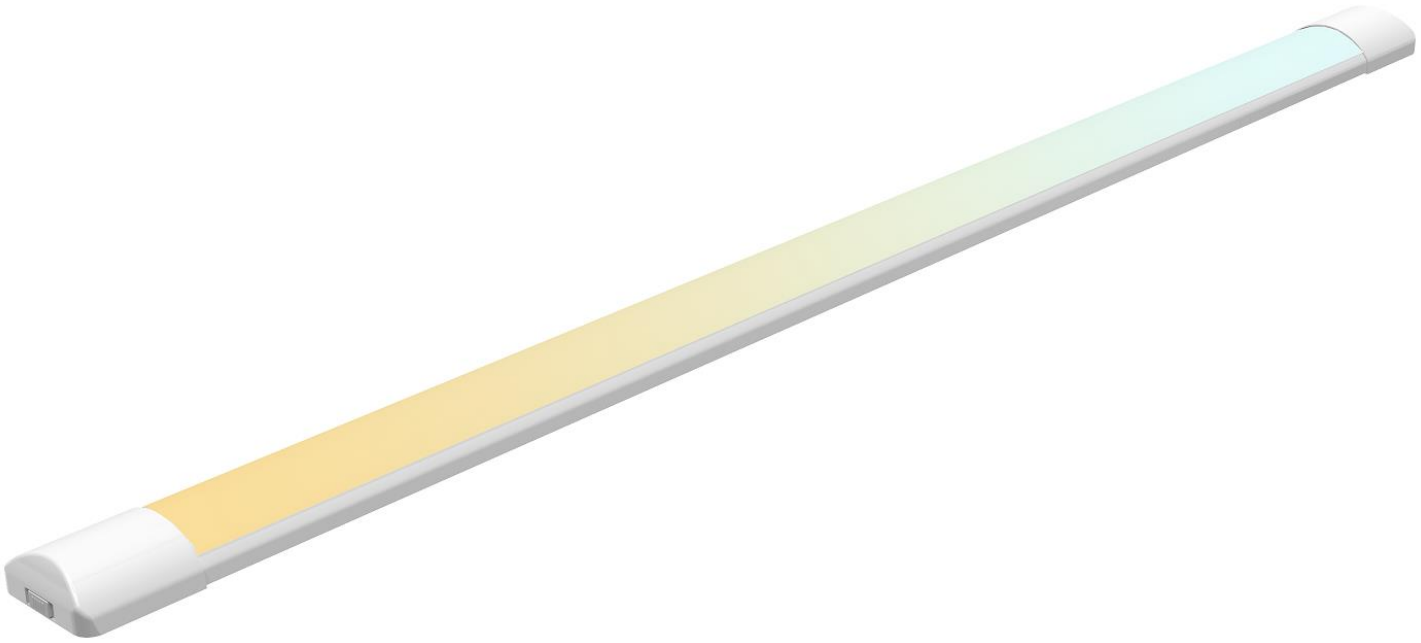









Features

Slim, robust IP20 LED batten suitable for ancillary areas and industrial applications. Selectable colour temperature 3000-6500K Warm White to Daylight.

- ✓ *All LED Batten luminaires are powered by CE approved*
- ✓ *Flicker free LED driver built-in for increased visual acuity and comfort*
- ✓ *More uniform and wide angle of opal cover*
- ✓ *Selectable colour temperature between 3000K, 4000K and 6500K Warm White, Cool White, Daylight*
- ✓ *Slim line design suitable for commercial, industrial, and residential installations*

Technical Parameters

ITEM	Parameter	GETP-03	GETP-06	GETP-12	GETP-15	Remark
1	Input Voltage	200-240	200-240	200-240	200-240	VAC
2	Frequency	50/60	50/60	50/60	50/60	Hz
3	Power Watt （±5%）	Type:9W	Type:18W	Type:36W	Type:45W	W
4	Displacement Factor	>0.7	>0.7	>0.9	>0.9	-
5	Driver Standard	CE/ERP2.0	CE/ERP2.0	CE/ERP2.0	CE/ERP2.0	-
6	LED TYPE	SMD2835	SMD2835	SMD2835	SMD2835	-
7	Color consistency in level	Max.6SDCM	Max.6SDCM	Max.6SDCM	Max.6SDCM	-
8	Starting Time	<0.5	<0.5	<0.5	<0.5	Seconds
9	Luminous Efficacy	120	120	120	120	Lm / w
10	LED Chips	2835SMD	2835SMD	2835SMD	2835SMD	Model
11	Viewing Angle	120	120	120	120	Degree
12	Luminous Flux （±5%）	Type:1080LM	Type:2160LM	Type:4320LM	Type:5400LM	LM
13	CRI	>80	>80	>80	>80	-
14	CCT	WW: F3000 NW: F4000 CW: F6500	WW: F3000 NW: F4000 CW: F6500	WW: F3000 NW: F4000 CW: F6500	WW: F3000 NW: F4000 CW: F6500	K
15	Work Tem.	-20—40	-20—40	-20—40	-20—40	℃
16	Input Type	2*0.75m² 20cm	2*0.75m² 20cm	2*0.75m² 20cm	2*0.75m² 20cm	-
17	Warranty	2	2	2	2	Years
18	LVD	3000	3000	3000	3000	ACV/5mA/1min
19	Body Material	PC	PC	PC	PC	-
20	PC Cover Color	Opal	Opal	Opal	Opal	-
21	Life Time	25,000	25,000	25,000	25,000	Hrs
22	Length	300	600	1200	1500	mm

www.ledbox.es

Dimensions

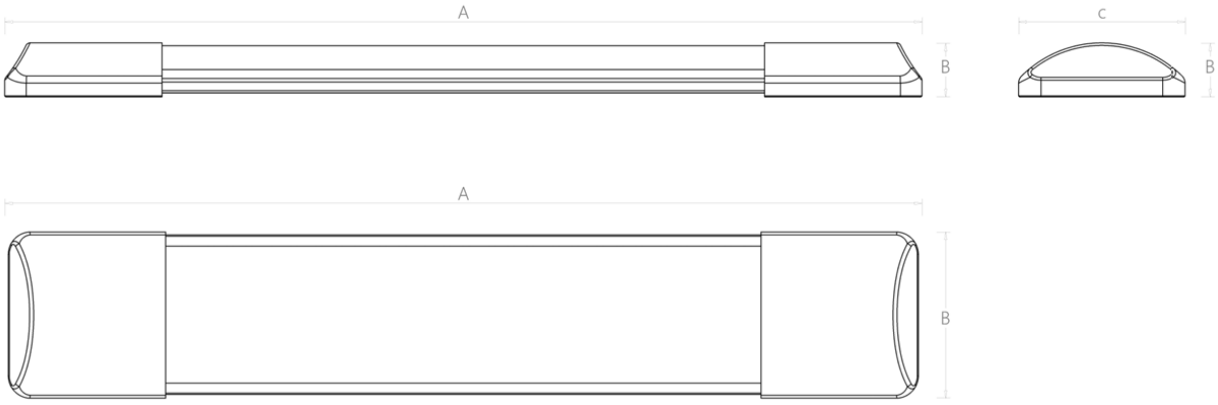

Dimensions				
ITEM	*GETP-03*	*GETP-06*	*GETP-12*	*GETP-15*
A(mm)	300mm	600mm	1200mm	1500mm
B(mm)	70	70	70	70
C(mm)	25	25	25	25

Packing

Optional	**Inner Box**	**Inner Box**	**Inner Box**	**Inner Box**
ITEM	*GETP-03*	*GETP-06*	*GETP-12*	*GETP-15*
Qty/CTN	20pcs	20pcs	20pcs	20pcs
CTN Size cm	L34*W27.5*H16.5	L64*W27.5*H16.5	L124*W27.5*H16.5	L154*W27.5*H16.5
G.W/CTN(kg)				

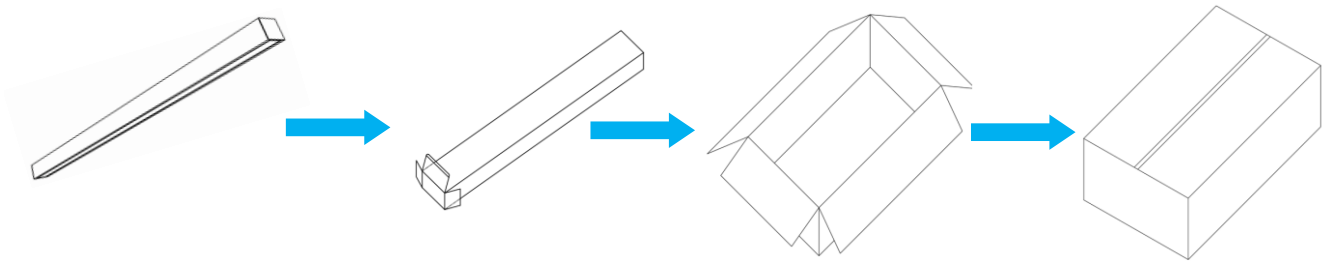

Installation Notes

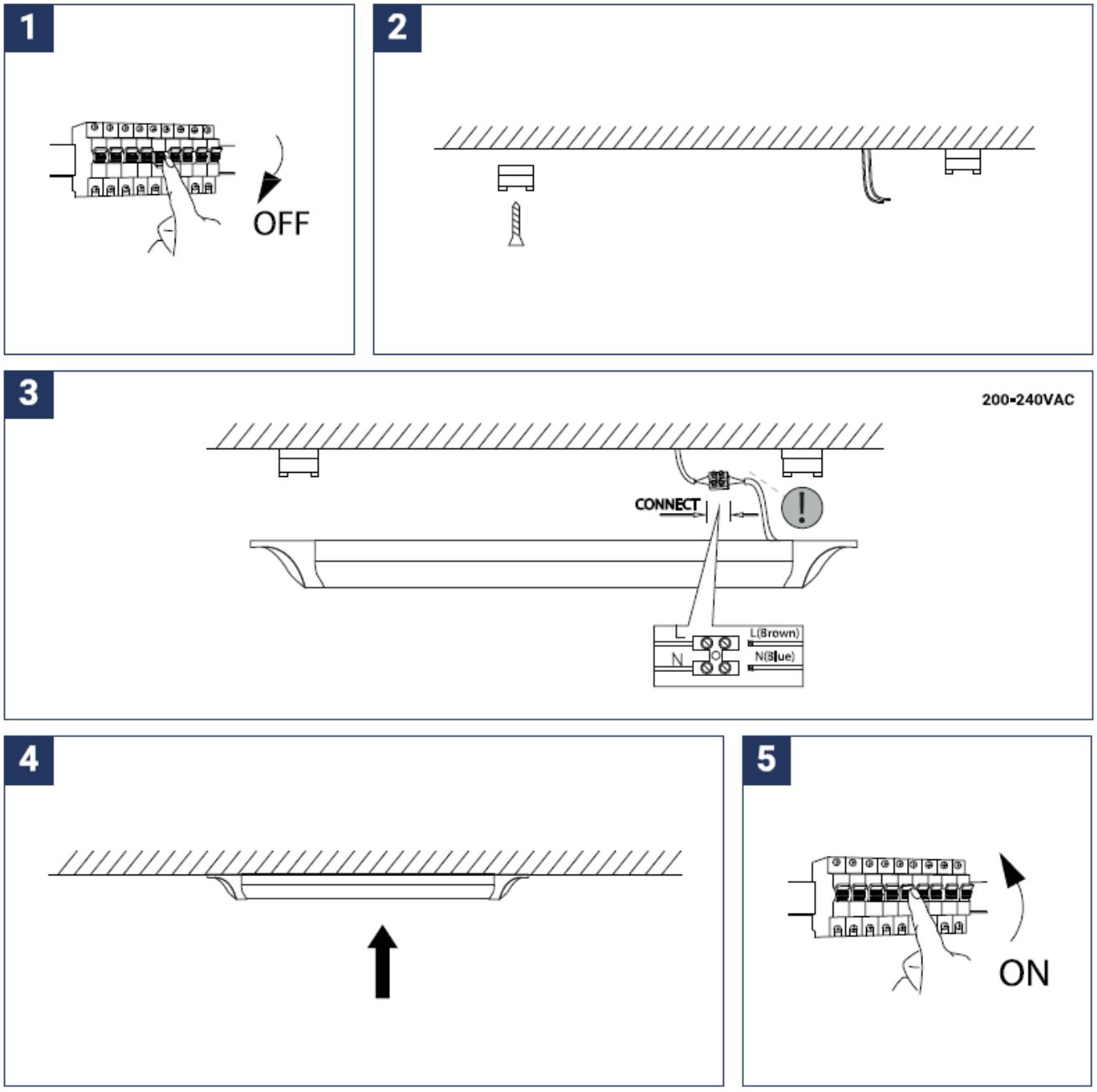

Application

IP20 design, widely illumination angle, can be used in supermarkets, Living room, bedroom, bathroom, balcony, kitchen, garden, private garden, Commercial building, office, Hotel, shopping mall, hallway, stairway, subway station, swimming pool, theater, factory, Warehouse.. Compared with ordinary LED batten, the use of environment and environment are more extensive, meeting the unique needs of more customers.

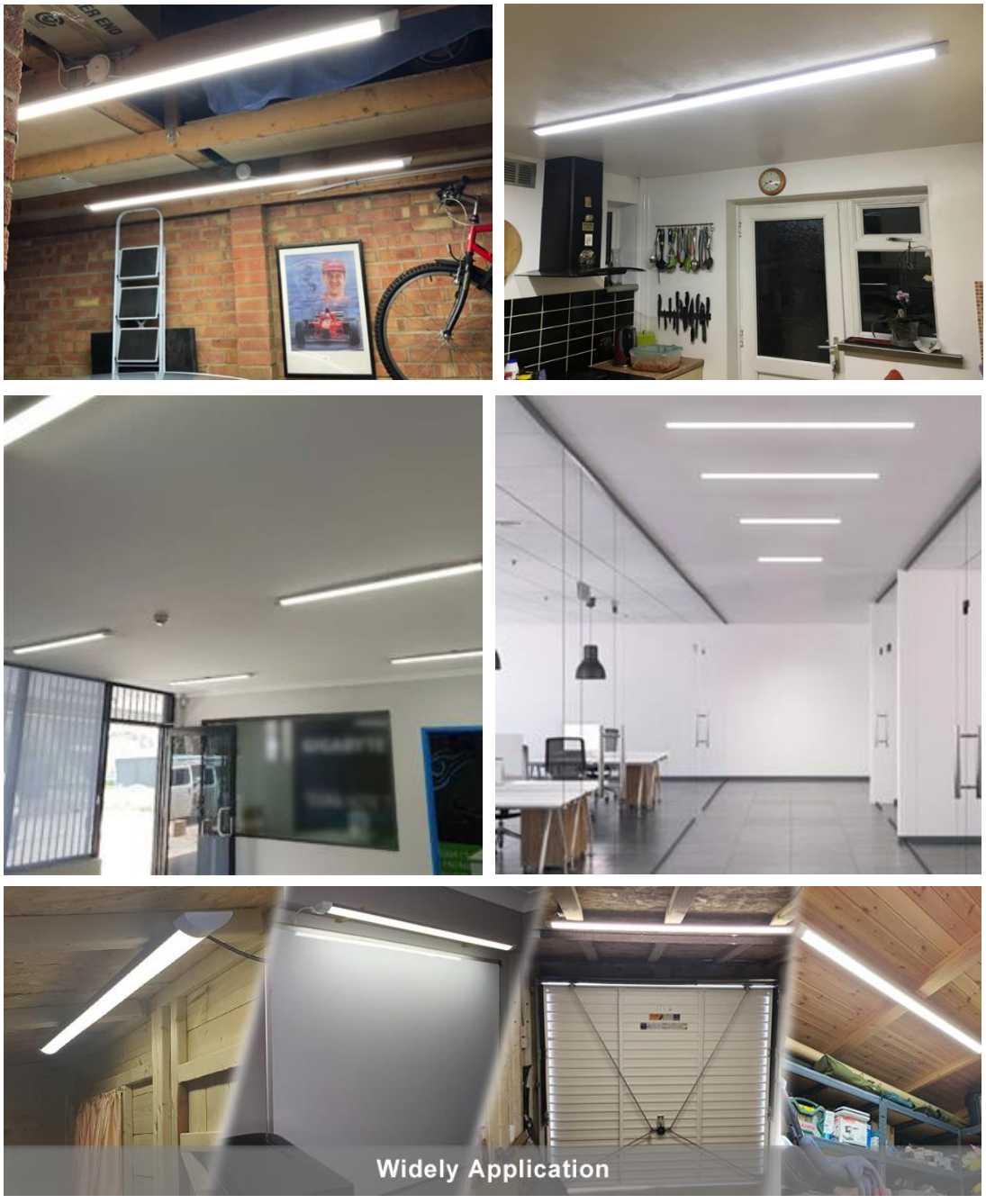

REQUIRED TOOLS

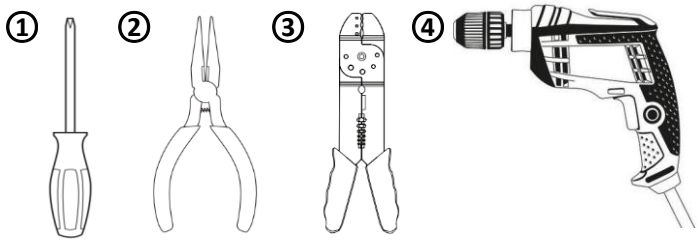

1) Phillips-head Screwdriver
2) Pliers
3) Wire Stripper
4) Electric Drill

INSTALLATION ATTENTION

1 TURN POWER OFF AT CIRCUIT BREAKER

SHOCK HAZARD! May result in serious injury or death.
Turn power OFF at circuit breaker prior to installation.

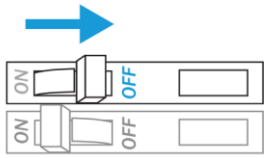

a) Prepare cable end as advised in Cable stripping diagram.
b) Extra connector block from cable gland section retained on the end of the luminaire.
c) Insert Ground wire to ⏚ terminal (Yellow-Green)
d) Insert Live wire to L terminal (brown) and tighten.
e) Insert Neutral wire to N terminal (blue) and tighten

2. TURN POWER ON AT CIRCUIT BREAKER

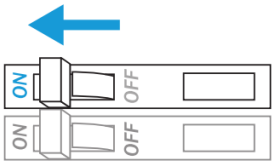

TROUBLESHOOTING

Lights are flickering	• Verify fxture is wired to a 175V-265VAC circuit. • Verify wiring to 0-10V Dimmer or Dali are correct.(Optional)
Lights will not illuminate	• Ensure main power is turned On.

Notes

Working Condition

1. Input: 230VAC
2. Mounting: Surface Mount or (Optional) Suspension Cables
3. Ambient Temp1: -4 - 140°F (-20 ~ 60°C)
4. Operating Temp2: -4 - 104°F (-20 ~ 40°C)

COMPLIANCE & REGULATORY APPROVALS

Safety

• BS EN 60598-1 / AS/NZS 60598.2.1

• Certified for use in the Europe

Performance

• Photometric & Colorimetry data measured in accordance to IES LM-80, in Ever-fine LED's Innovation Lab equipment.

SAFETY / WARNINGS / DISCLOSURES

1. Do not install product in an environment outside the listed ambient temperature. Exceeding the maximum ambient temperature may damage LED chips, reduce the total lamp life, lumen output, and/or adversely impact color consistency.
2. Operating temperature is measured according to the minimum and maximum ambient temperature environment.
3. Install in accordance with national and local electrical code regulations.
4. This product is intended to be installed and serviced by a qualified, licensed electrician.
5. Not for use in or on walls of pools, fountains, or other partially or fully submersed locations.
6. Do not modify or disassemble product beyond instructions or this warranty will be void.
7. Actual color may vary from what is pictured above and on other print materials due to the limitations of photographic processes.
6. We reserve the right to modify and improve the design of our fixtures without prior notice. We cannot guarantee to match existing installed fixtures for subsequent orders or replacements in regards to product appearance, CCT, or lumen output.

LIMITED WARRANTY

This product has a FIVE (5) year limited warranty from the date of shipment. This warranty does not include the additional accessories referenced in this specification sheet. For warranty related questions please contact product support.

CONSUMER'S ACKNOWLEDGMENT

There is often more than one way to design, configure and layout an LED lighting application properly to achieve the same lighting effect. Gesung strongly recommends that licensed professionals be used in the design and installation of lighting systems that include our products. The specification including important information that a designer and installer should carefully review and strictly follow. Qualified designers and certified and/or licensed installers, with access to the final installation environment, customer goals, and Elemental LED product specifications can make the requisite decisions appropriate for a successful finished lighting application.

www.ledbox.es