ROHS

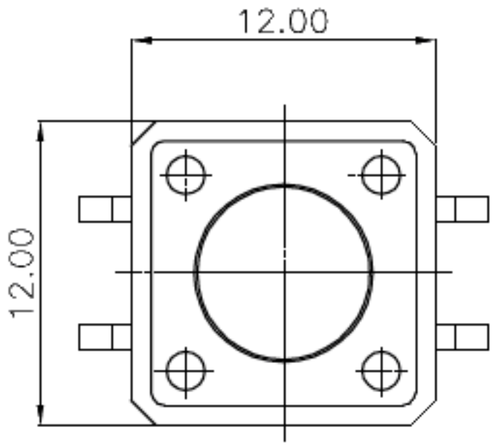

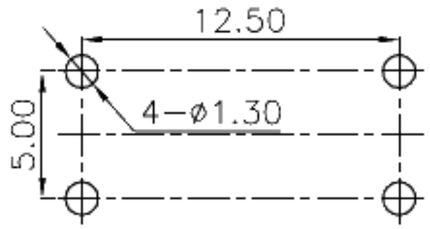

PCB Layout(Pattern side)

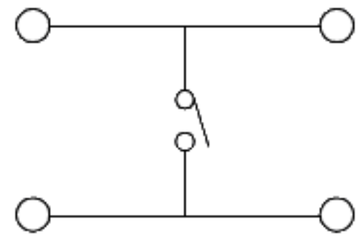

Circuit Diagram

NO.1			
PART NO	H	PART NO	H
A	4.3	O	11
B	4.5	P	11.5
C	5	Q	12
D	5.5	R	12.5
E	6	S	13
F	6.5	T	13.5
G	7	U	14
H	7.5	V	15
I	8	W	16
J	8.5	X	17
K	9	Y	18
L	9.5	Z	19
M	10	1	15.5
N	10.5		

NO.2	
PART NO	vigor
1	90±30
2	130±30
3	180±30
4	250±30
5	350±50

NO.3	
PART NO	MATERIAL/QTY
S	SUS/1PC
C	C5210/1PC
D	SUS/2PCS
F	C5210/2PCS

NO.4−NO.5	
PART NO	NOTE
01~99	SERIAL NUMBER

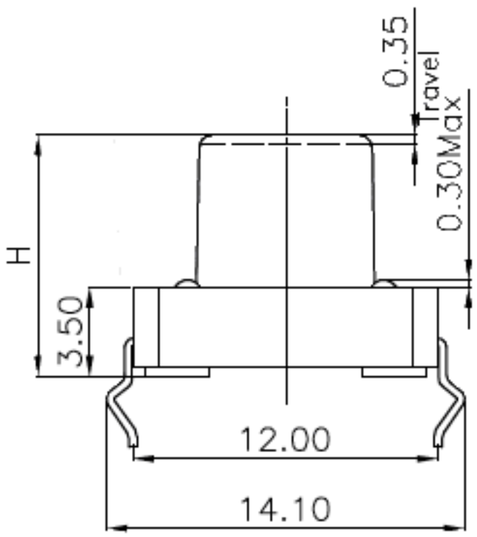

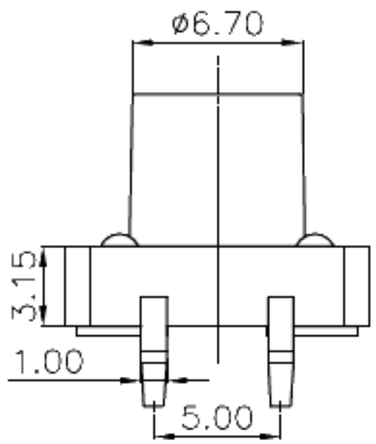

ITEM	PART NAME	TER'NO.	QTY.	MATERIAL	FINISHING	REMARK
⑤	Terminal	——	4	Brass(0.3t)	Plating silver	——
④	Contact	——	1	F.Ag/C5210	——	——
③	Base	——	1	Nylon	Black	UL94V−0
②	Cover	——	1	SPCC	Plating Sn	——
①	Keystoke	——	1	Nylon	Black	UL94V−0

APPROVALS		DATE			
DRAWN	J.X.Zhang	2013/7/17			
CHECKED			TITLE:	TACT SWITCHS	
APPROVALS			PART NO.	**12x12x4.3mm(DIP)**	
TOLERANCES ARE	30~以下 ±0.30; 10~30 ±0.20; 5~10 ±0.15; ~5 ±0.10	ANGLE ±2°	UNIT: mm	SCALE: 1:1	PROJ:
			DRAWING NO.	——	SHEET 1 OF 1

ECN NO.	REV.	DATE.	DESCRIPTION.	CHANGE.	CHECK.	APPRO.
——	A	——	NEW	——	——	——