Smart Zigbee Gateway

User Manual



Product Description

The smart Zigbee gateway is the control center for Zigbee devices.
You can add Zigbee devices to design and implement smart scenes.

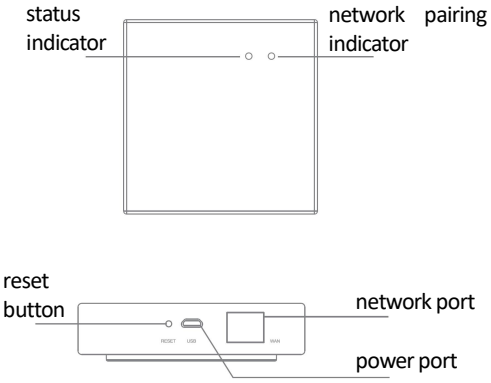

Preparation

1. Connect your mobile phone to the Wifi network.
Be sure your mobile phone and the smart Zigbee gateway to the same Wifi network.
2. Use your mobile phone to scan the QR code below or search "Smart Life" from Apple store or Google play to download the APP.
If you don't have the account, please register an account first. If you have an account already, input account name and password to sign in.