1. Features



MS10 A
Screw Mounting



MS10 B
Spring Mounting

- Adopts Merrytek patent Daylight harvesting technology
- High applicability ,Keep a constant light in spite of background color
- Precise setting of target light via BCD coding switch, convenient for setting
- 5 years warranty

2. Parameter

Input	Operating Voltage Range	1-10V DC
	Rated Voltage	1-10V DC
Sensor Parameters	Detection Range	3-4m
	Daylight Sensor	100-2000Lux
Dim Interface	1-10V dimming	<50 mA
	Dimming mode	Lead connection: red is the positive pole of port 1-10v; black is the negative pole of port 1-10v
Operating Environment	Operating Temperature	0℃…+55℃
	Storage Temperature	-35℃…+80℃
Certificate Standards	Environmental Requirement	Compliant with RoHS
	Certificate	CE
	IP Rating	IP20
	Protection Class	Class 2
	Installation	Built-in installation
	Dimension	90*130 mm
	Package	White bag+Clapboard + Carton(K=A)
	Net Weight	A:26.7g B:29.8g
	Lifetime	5 years warranty @Ta 230V full load

3. Function

Constant light functions



8:30
Natural light in the morning: 80 Lux
Light sensor supplement: 220 Lux
Indoor balanced illumination: 300Lux



12:00
Natural light in the afternoon: 200 Lux
Light sensor supplement: 100 Lux
Indoor balanced illumination: 300Lux



18:00
Natural light in the dust : 60 Lux
Light sensor supplement: 230 Lux
Indoor balanced illumination: 300Lux



21:00
Natural light in the evening : 2Lux
Light sensor supplement: 298Lux
Indoor balanced illumination: 300Lux

4. Dimension (mm)

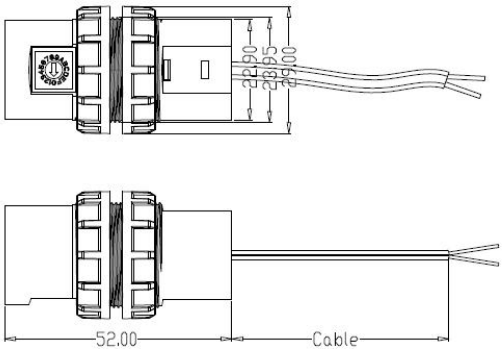

MS10 A

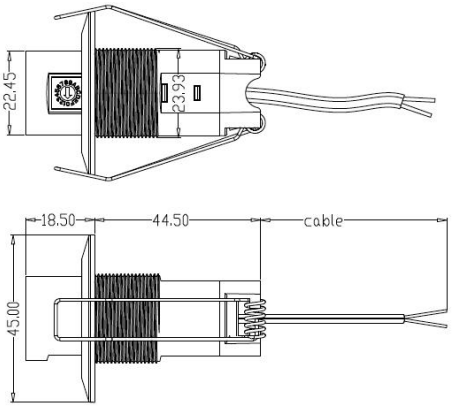

MS10 B

5. Wiring

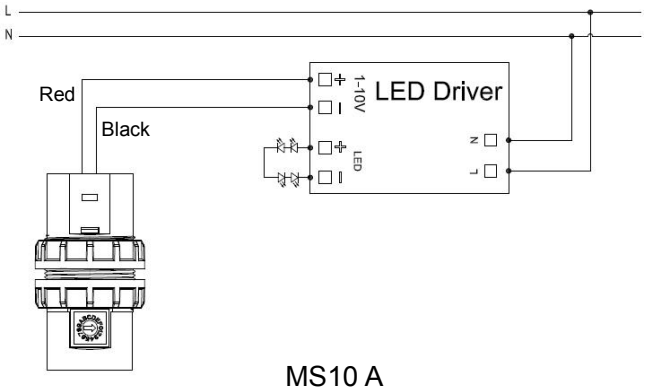

MS10 A

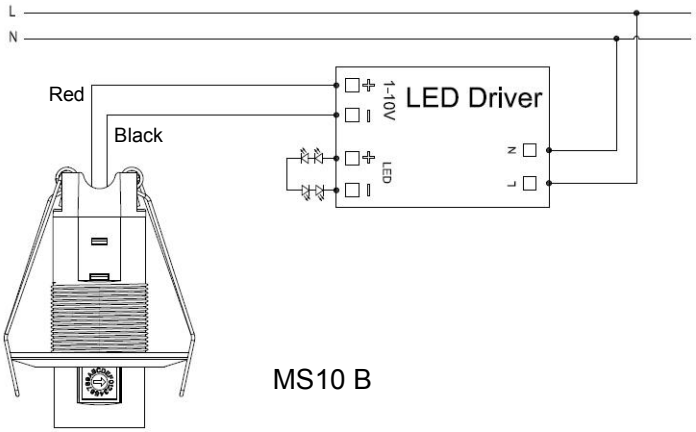

MS10 B

6. Structure

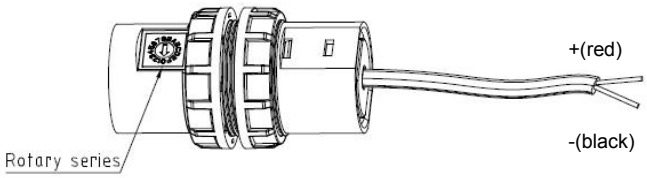

MS10 A

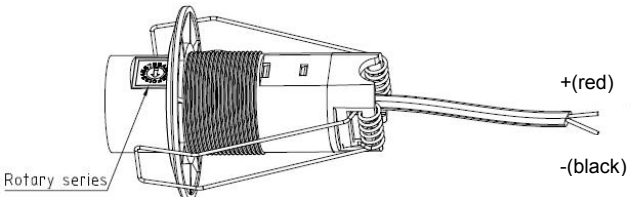

MS10 B

7. DIP Switch Setting

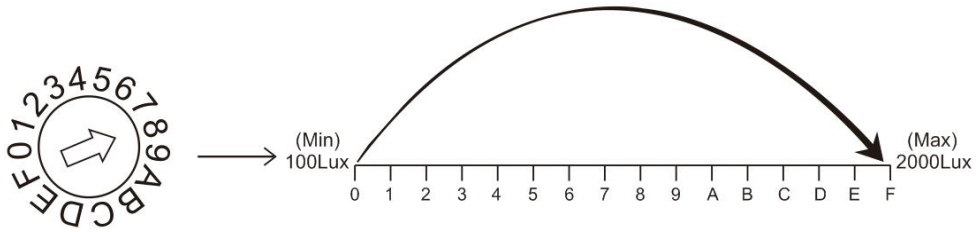

Lux curves of different gears of 0-F (refer to load of 30w) :

Level	Lux Value
0	100
1	190
2	220
3	250
4	280
5	300
6	500
7	530
8	600
9	680
A	750
B	800
C	
D	
E	
F	

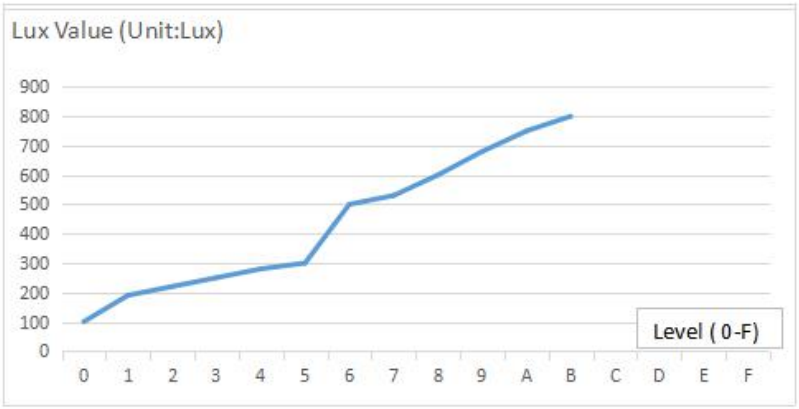

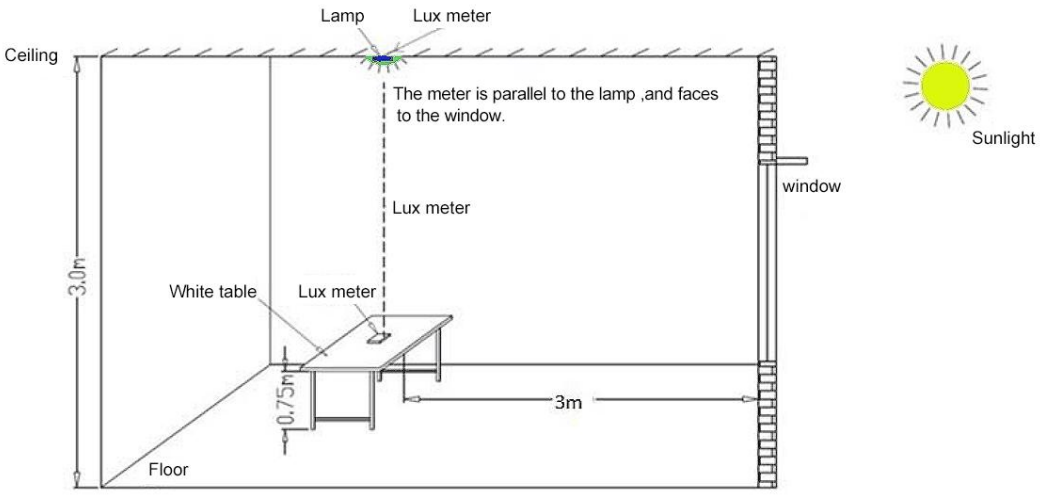

8. Application Notice

1) To be equipped with active 1-10v dimming power supply for use!

2) Pay attention to the positive and negative terminals of the leads when wiring and installation.