merrytek®

Microwave Motion Sensor

MC054V RC & MH01
Remote Control Microwave Sensor / Dimming Function





Introduction

- Sensor parameters can be conveniently set by a remote control.
- Mounting height up to 15m max. , suitable for warehouse use.
- Water proof sensor with IP65 rating.
- Automatic dimming when used in combination with 1-10V dimmable control gears.
- Built-in adjustable daylight sensor.
- 1-10V interface can match up with Merrytek stand-alone daylight sensor MS01 and achieve daylight harvesting.
- Optional mounting brackets for different application.

The MC054V RC sensor is innovative and active motion detectors with HF system 5.8GHz. Motion can be detected through plastic, glass and thin non-metal materials. except the higher mounting height 15m Max.

The sensors allow energy saving without compromising comfort. When used in combination with 1-10V dimmable LED drivers or ballasts, they can achieve 3-step dimming function, which is perfect for use in some areas that requires a light change notice before totally switch off.

Also, the infrared remote controller design makes the customer to adjust the parameters of the sensors easily.


Max.8M


Hold Time
5s~30min



Mounting Height
15m Max.

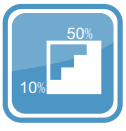

Automatic
Dimming



5 Years
Guarantee

Dimming Function

3-step dimming function

When used in combination with 1-10V dimmable LED drivers and ballasts, the sensors can achieve 3-step dimming function, 100%---> low light--->off. And the sensors build in adjustable daylight sensors, very easy to install and cost-effective.

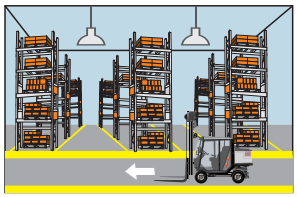

With sufficient ambient light, the sensor does not switch on the lamp.

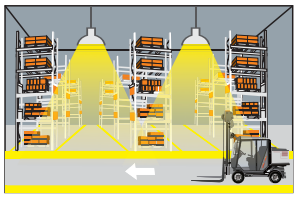

With insufficient ambient light, the sensor switches on the lamp when motion is detected.

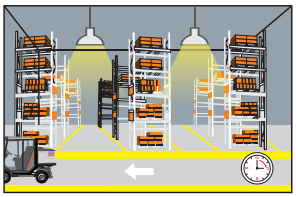

After hold time, the sensor dims the lamp at a low light level if no new motion trigger.

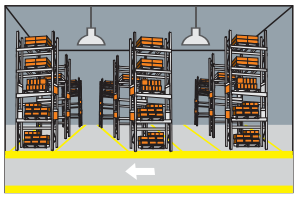

After stand-by period, the sensor switches off the lamp if no motion is detected in its detection zone.

Detection Pattern

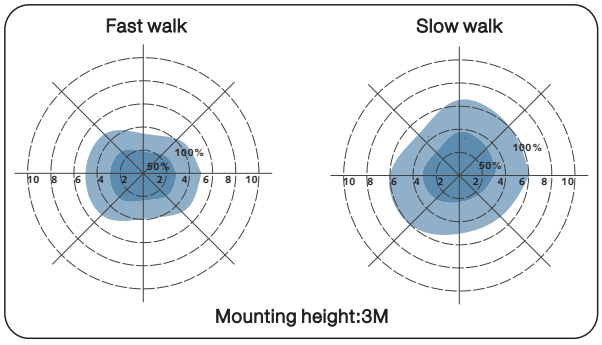

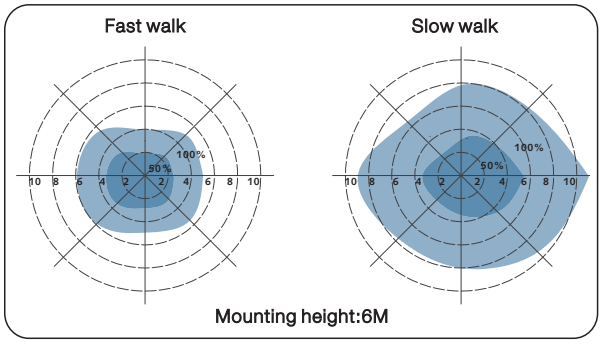

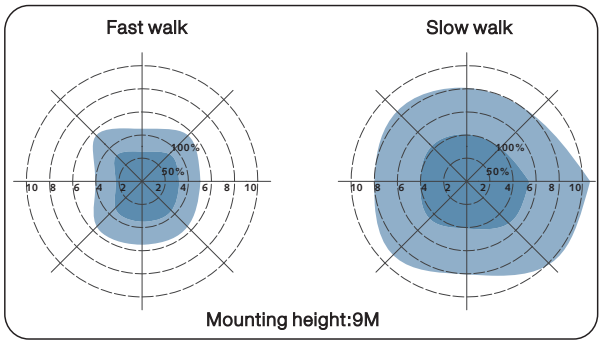

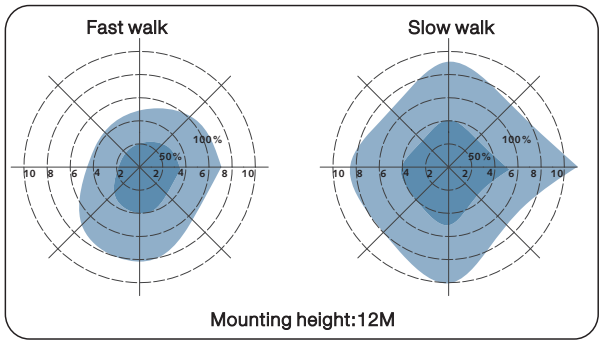

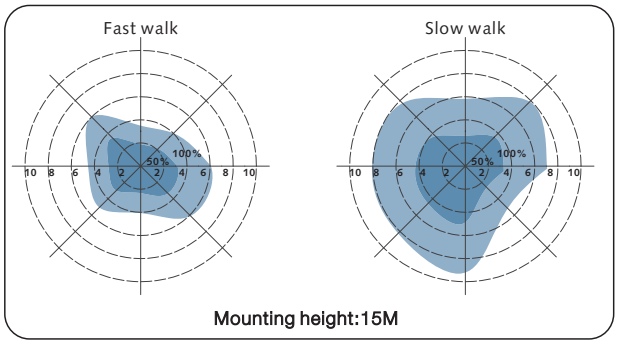

Settings (Remote Control MH01)

Button	Remarks
ON/OFF	Press the "ON/OFF" button, the light goes to constant on or constant off mode, sensor is disabled. Press " Reset " or " Auto Mode" button to quit from this mode.
Reset	Press "Reset" button, all parameters are same as setting of DIP switch.
Auto Mode	Press "Auto Mode" button, the sensor starts to work and all parameter setting will be remained the same as the previous status before the light was switched on/off.
DIM Test	Press "DIM Test" button to test dimming function. Sensor will dim automatically and return to normal work mode.
Test (2s)	The button "Test(2s)" is for factory testing purpose only. The sensor will go to test mode, Detection sensitivity: 100% Hold time: 2sec stand-by dim level:10% Stand-by period: 0s Daylight sensor: Disable Test mode can be quit by pressing any button.
QS1 QS2 QS3 QS4	See table below

scene Options	Detection Area	Hold Time	Stand-by period	Stand-by dim level	Daylight Sensor
QS1	100%	30s	1min	10%	5Lux
QS2	100%	1min	3min	10%	10Lux
QS3	100%	5min	10min	10%	30Lux
QS4	100%	10min	30min	10%	Disable

Note: Detection area / Hold time /Stand-by period / Stand-by dim level / Daylight sensor can be adjust by pressing corresponding button. The latest setting stays in validity.

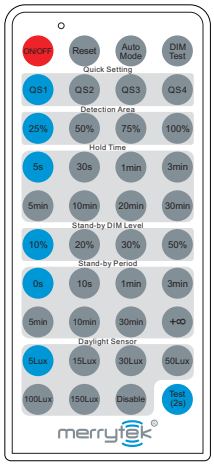

As the control angle of the Infrared Remote Control is fixed (15°), if sensors are installed too close to each other, settings of both sensors will be configured. Please refer to the below chart for the distance of the installation of the sensor:

Mounting height	Distance between sensors
15m	4m
12m	3.4m
9m	2.4m
6m	1.6m
3m	0.8m

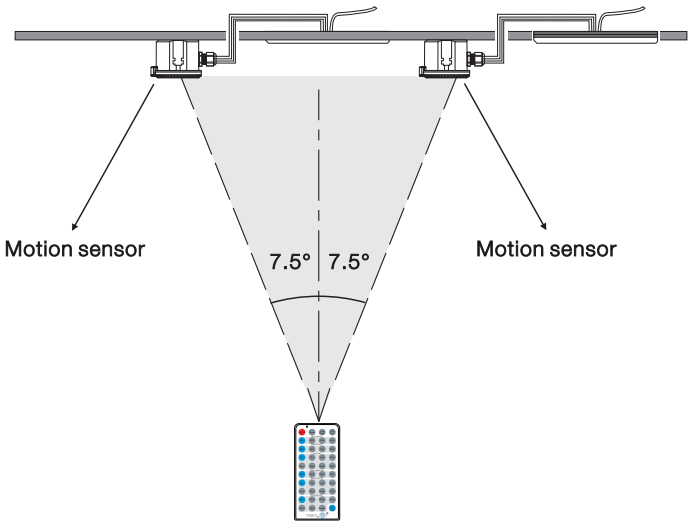

Microwave Motion Sensor

MC054V RC A	MC054V RC B	MC054V RC C	MC054V RC D
Metal Reflector Clip	Oval Surface Mounted Bracket	Rotatable Metal Bracket	
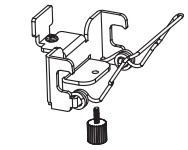	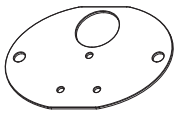	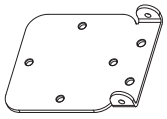	
 8X10+M3.0X8mm Screw 1X	 M4.0X25mm Screw 2X	 M3.0X8mm Screw 4X	
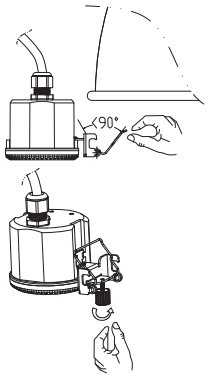	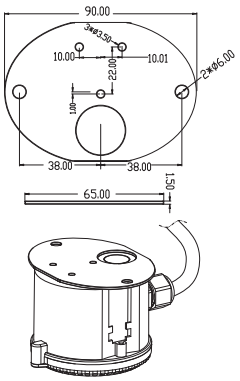	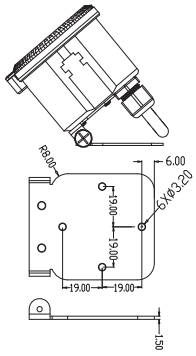	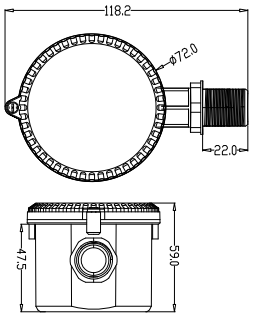

Wiring scheme

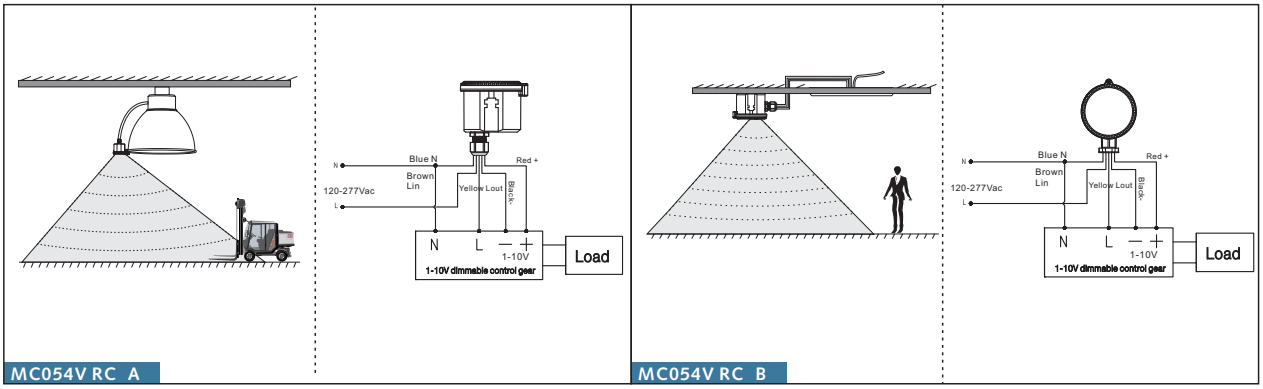

MC054V RC A

MC054V RC B

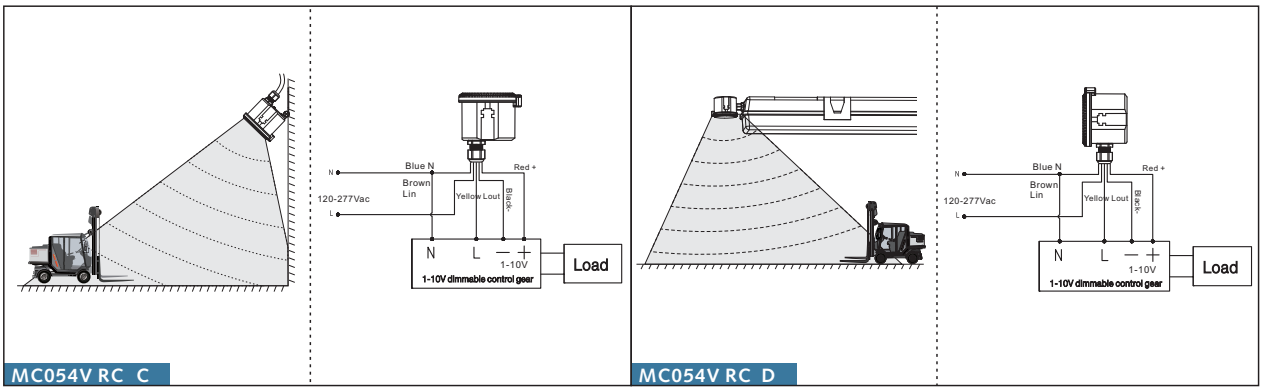

MC054V RC C

MC054V RC D

merrytek®

Microwave Motion Sensor

Setting

By selecting the combination on the DIP switch, sensor data can be precisely set for each specific application.

	1	
I	ON	100%
II	–	50%

Detection area

Detection area can be reduced by selecting the combination on the DIP switches to fit precisely each application.

	2	3	4	
I	ON	ON	ON	5S
II	–	ON	ON	30S
III	ON	–	ON	1min
IV	–	–	ON	3min
V	ON	ON	–	20min
VI	–	–	–	30min

Hold time

Refers to the time period the lamp remains at 100% illumination after no motion detected.

	1	2	3	
I	ON	ON	ON	0S
II	–	ON	ON	1min
III	ON	–	ON	3min
IV	–	–	ON	10min
V	ON	ON	–	30min
VI	–	–	–	+∞

Stand-by period

Refers to the time period the lamp remains at a low light level before it completely switches off in the long absence of people. When set to "+∞" mode, the low light is maintained until motion is detected.

	4	5	
I	ON	ON	10%
II	ON	–	20%
III	–	ON	30%
IV	–	–	50%

Stand-by dimming level

The low light level you would like to have after the hold time in the long absence of people.

	6	7	8	9	
I	ON	ON	ON	ON	5Lux
II	–	ON	ON	ON	15Lux
III	ON	–	ON	ON	30Lux
IV	–	–	ON	ON	50Lux
V	ON	ON	–	ON	100Lux
VI	ON	ON	ON	–	150Lux
VII	–	–	–	–	Disable

Daylight sensor

The sensor can be set to only allow the lamp to illuminate below a defined ambient brightness threshold.
When set to Disable mode, the daylight sensor will switch on the lamp when motion is detected regardless of ambient light level.
Note that daylight sensor is active only when lamp totally switches off.

Technical Parmeters

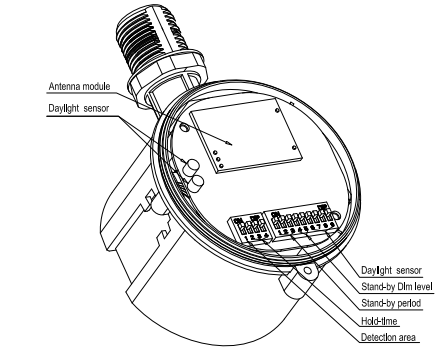

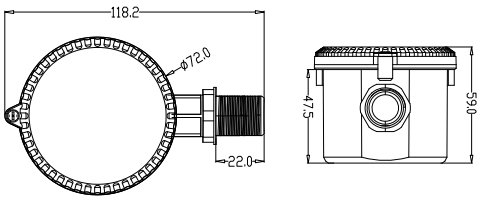

Operating voltage	120~277Vac, 50/60Hz
Rated load	400W@120vAC, 800W@220~277Vac (Inductive) 800W@120Vac, 1200W@220~277Vac (Resistive)
Power consumption	<1W
HF system	5.8GHz ±75MHz, ISM wave band
Transmitting power	<0.5mW
Detection area	5-8m(@mounting height 6m)
Detection sensitivity	25%/50%/75%/100%
Hold time	5s/30s/1min/3min/5min/10min/20min/30min
Daylight sensor	5lux/15lux/30lux/50lux/100lux/150lux/disable
Stand-by period	0s/10s/1min/3min/5min/10min/30min/+∞
Stand-by DIM level	10%/20%/30%/50%
Mounting height	6-15m
Motion detection	0.5~3m/s
Detection angle	150°(wall installation) 360°(ceiling installation)
Operating temperature	-25℃~ 55℃
IP rating	IP65