VITRALUX - U - 50CM

LEDBOX® iluminación modular LED de vitrinas



X2



LD1011352
Conector L (x2)

X2



LD1011356
Base de fijacción

Incluye

X3



X3



LD1011348
Conector DC (izquierdo)

X3 466mm

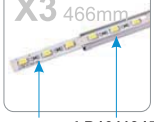

Tira LED rígida

LD1011345
Perfil Aluminio 1m

X3 456mm



LD1011346
Cubierta Milk 1m

X3



LD1011349
Conector DC (derecho)

X2



LD1011347
Conector con cable

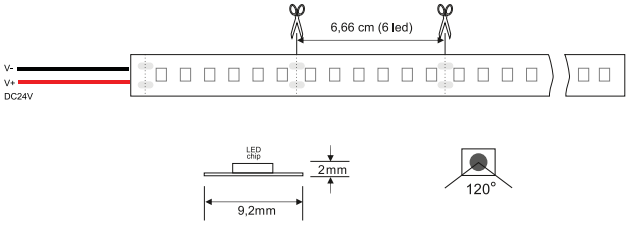

Tira LED rígida EPISTAR SMD2835, DC24V, 1m (90Led/m) - IP20, 18W/m

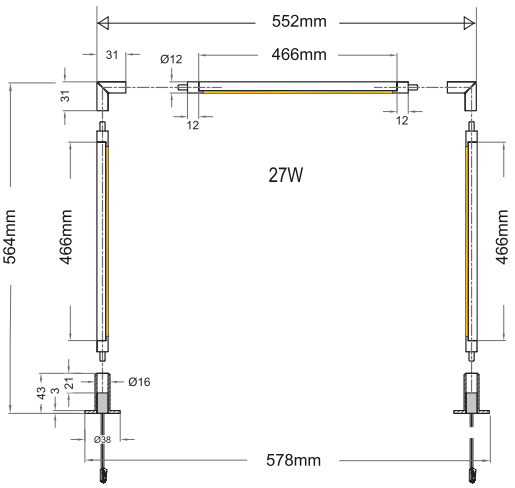

VITRA LUX U

LD1011366 - 50cm, 24W, 3000K
LD1011367 - 50cm, 24W, 4000K
LD1011368 - 50cm, 24W, 6000K
LD1011369 - 100cm, 36W, 3000K
LD1011370 - 100cm, 36W, 4000K
LD1011371 - 100cm, 36W, 6000K

Tira LED rígida DC24V, SMD2835 EPISTAR 120 led, 24W / metro, CRI >80, 1900lm/m Silver Aluminio + PC

LD1050273 - 1m, 3000K
LD1050274 - 1m, 4000K
LD1050275 - 1m, 6000K