

LED Table lamp

High quality environment, to make efficient work

Variety of colors

Refer to iPhone 6s colors, we have 4 options: Rose gold, Gold, Silver & White. The integration of Lamp is simple and generous.



LED Table Lamp



Eye-protection

Best for Drawing, Designing, Writing & Accounting

Soft&Even Lighting, Side-emitting LEDs
Osram/Philips LEDs, Latest SMD4014
108pcs LEDs, 5W, 1000Lux, CRI>90

SideView 3D Diagram

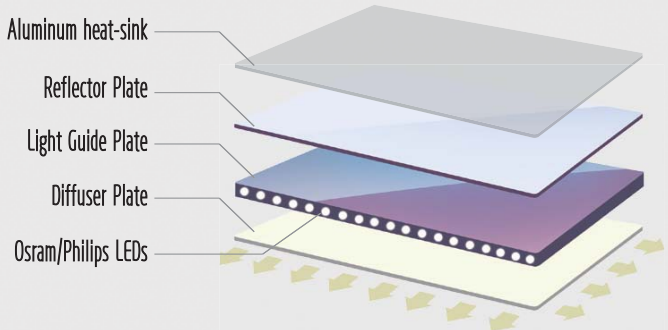

10 Sections Dimming

Intelligent Dimming & CCT changeable,
Controlled seprately or Mixed,
10 Sections Dimming, higher technology
than 8 Sections in the market.

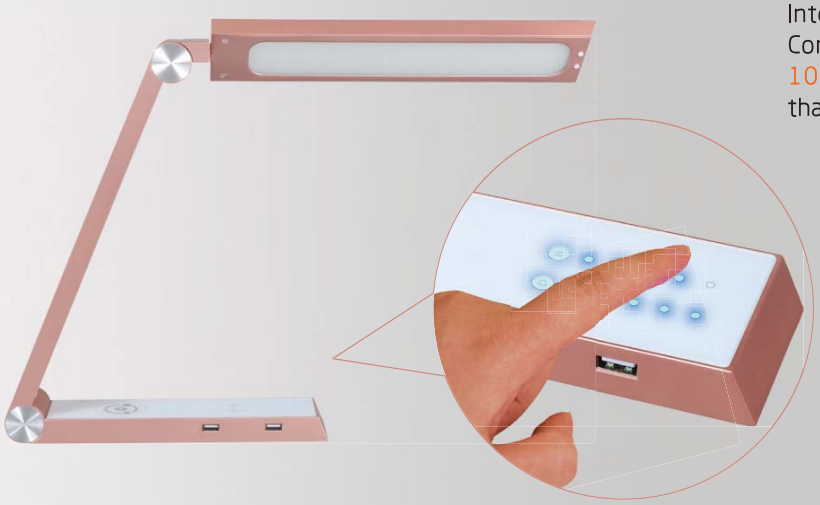

Surface treatment

High quality rubber paint,
feeling soft and smooth,
Metallic feeling, more elegant.



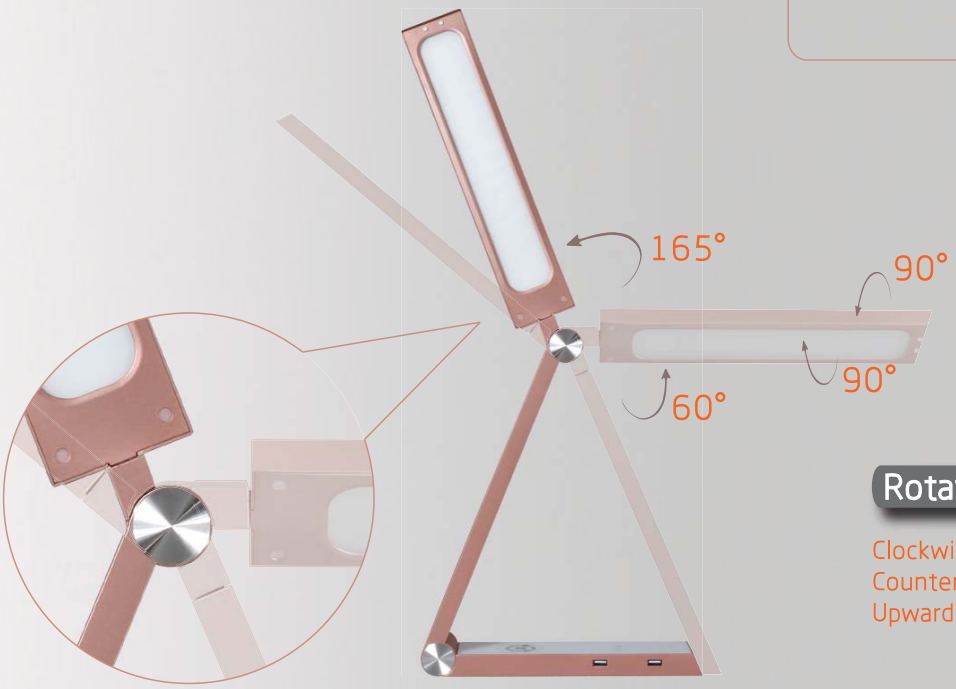

Rotation angle

Clockwise rotation angle: 90°
Counterclockwise rotation angle: 90°.
Upward rotation angle: 60° + 165°.



Qi Wireless charging

Qi wireless charging DC5V 2A,
Showing by LED indicator light:
Red light indicate standby,
Blue light indicate working.





USB charging

2 USB output DC5V 2A in total.
2A if 1 USB work, 1A of each
USB if 2 work together.

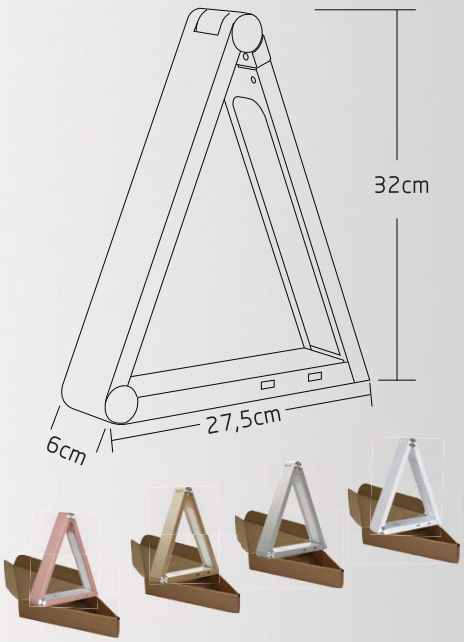

Lamp Power: 5 watts

Input voltage: 100-240Vac

LEDs: Osram / Philips

CRI: >90

Illumination: 1000 lux @300mm

Material: PC+ABS

Lamp size: 27,5*6*32cm

G.W.: 1,23KG

Box size: 31,3*6,5*38,2cm

LED adapter: Europe standard,
US standard, Australia standard.

Patent product

ISO9001
ISO14001
Factory

