



LED TRACK LIGHT



CCT Adjustable
via DIP Switch



DESIGN PHILOSOPHY:

LED track lights are adopted for accent lighting use. The rays must be pure. The brightness must light up the key zones. CCT is chosen as per application environments. CRI also major considerations. This series of track lights adopted die-caating aluminum body with air convection structure, which ensures the luminaire to run the stable temperature and less lumen loss. This keeps the lighting environment long time bright. TIR structure PMMA optical lens is adopted, the rays is even and pure at 92% transmission rate. Advanced DOB technology is adopted, no flicker, no dazzle and compatible with main TRI-AC dimmers in market. CCT adjustable via DIP Switch in the back, enables the user to install the luminaire for diversified needs.



OVERVIEW

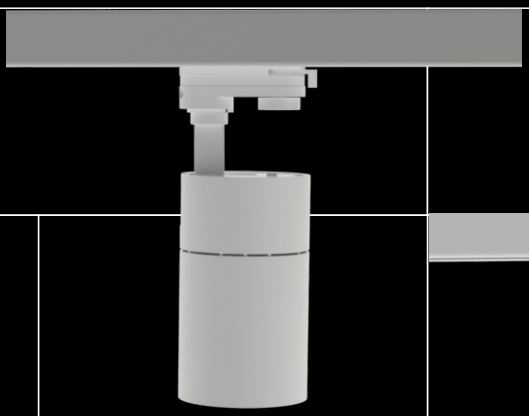

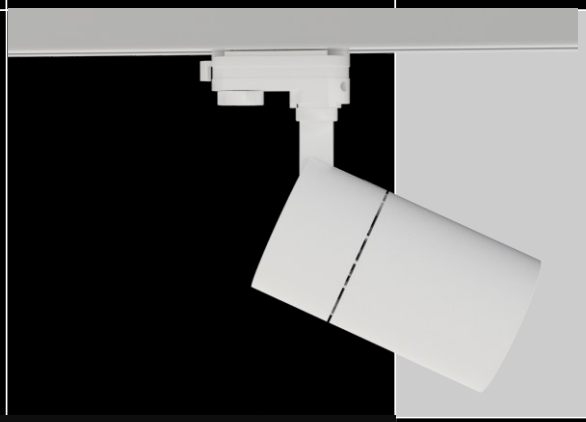











Features

- 50% higher energy saving rate than the traditional metal halide lamp.
- No flicker , no dazzle , meanwhile very healthy to the eye.
- Dimmable. Compatible with 90% triac dimmer in whole market.
- Environmental protection. Meet RoHs requirements, Contains no plumbum and tribute elements.

THERMAL MANAGEMENT

Structure is optimized by advanced FEA technology. Achieving longer lifespan at best cost-efficiency.

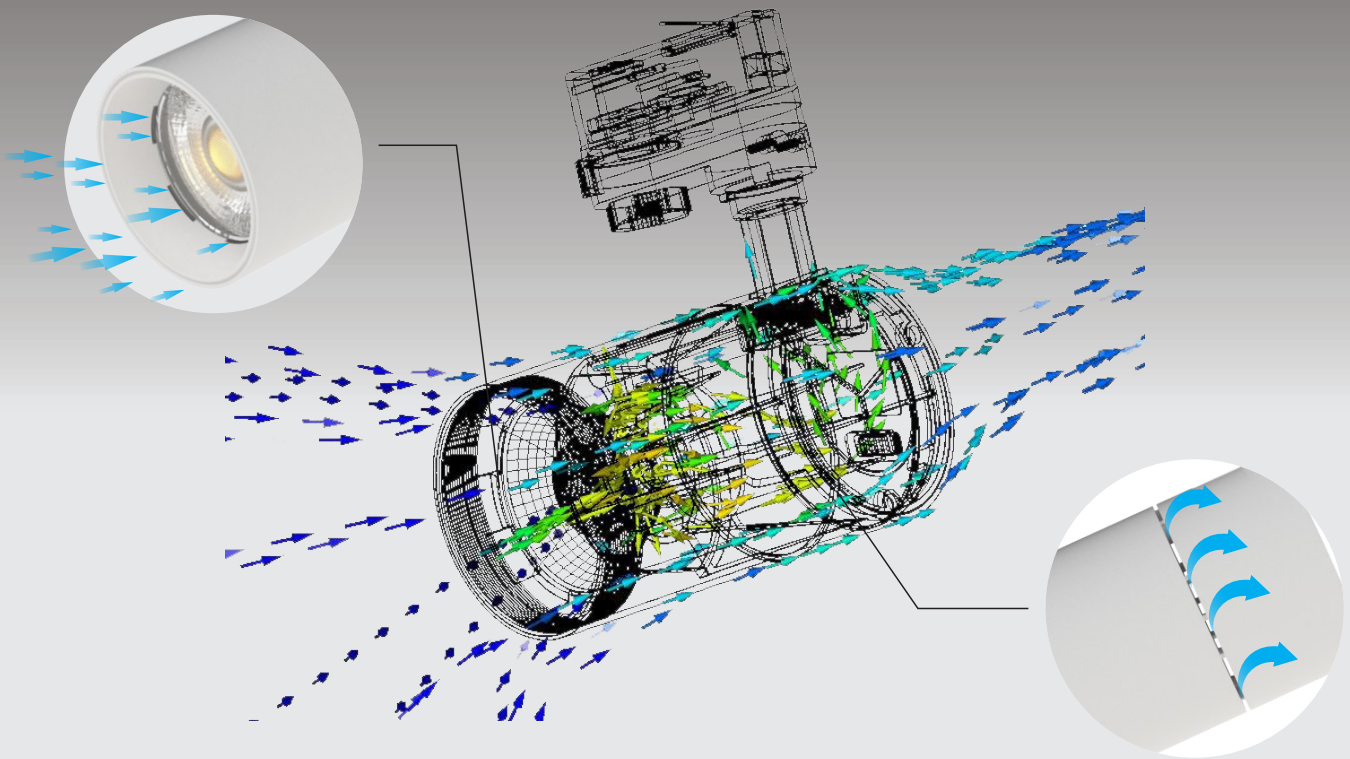

Thermal air convection structure, faster heatsinking and better lumen maintenance rate.

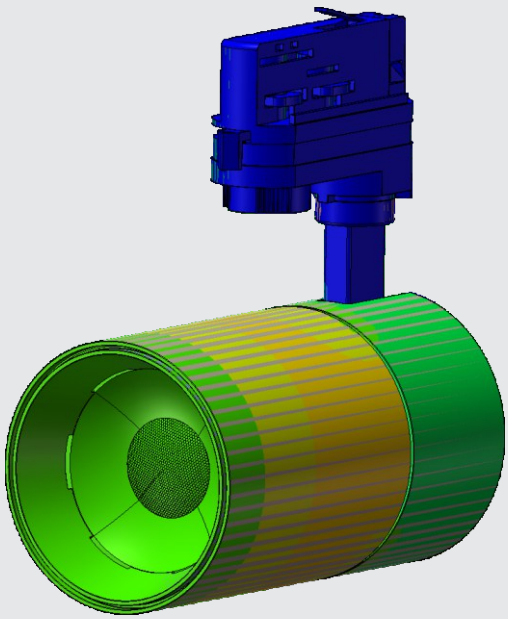

Thermal Conductivity

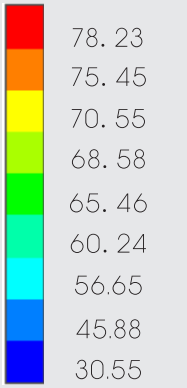

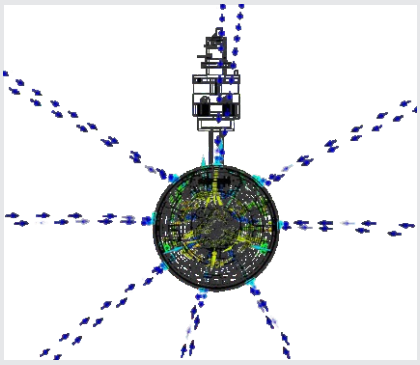

Thermal Air Convection

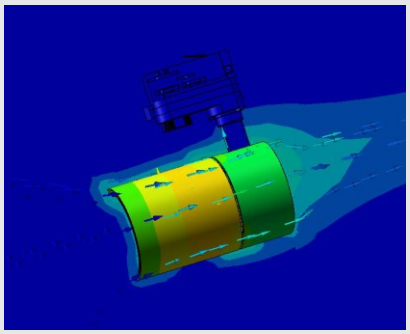

Thermal Air Flow(to environment)

EXPLODED

8

2-Wire / 3-Wire / 4-Wire optional



6

Angle adjustable arm

7

Diecasting aluminum body with air convection design.

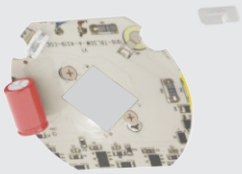

5

DOB Technology.

3

Nano-plastic reflector



4

High lumen dual CCT COB light source.



2

PMMA optical lens, TIR technology for strong central illuminance intensity and pure spot. Transmission rate>92%.

1

Air convection design front ring.

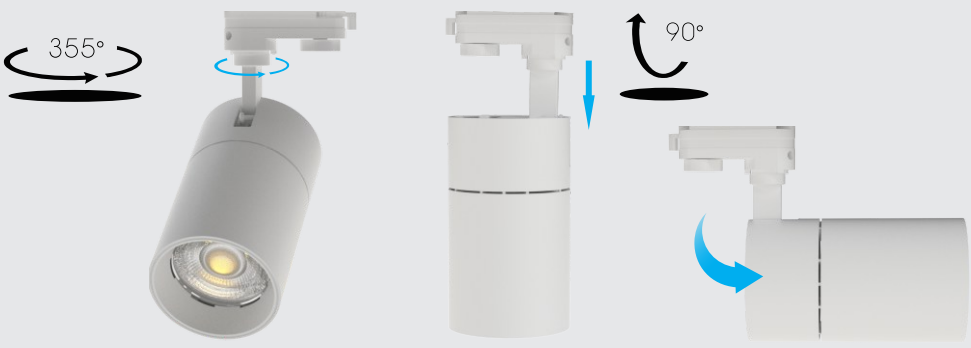

APPLICATIONS

Shopping malls , Cultural relics exhibition hall, Chain stores,
Brand business hall, Professional Windows, Counters and other key lighting places.

CCT Adjustable

3000K | 4000K | 5000K

The product can freely adjust the color temperature to meet different illumination requirements.

CCT adjustable via DIP switch.



No flicker , no dazzle ,
Healthy to the eye.

Warm White | Neutral White | Cool White

OPTICS

Tech. Support: Tell us the room length, width, height and the usage. We have an engineer team to respond the DIALUX simulations for lights quantity calculation and effects
.ies files are available upon request.

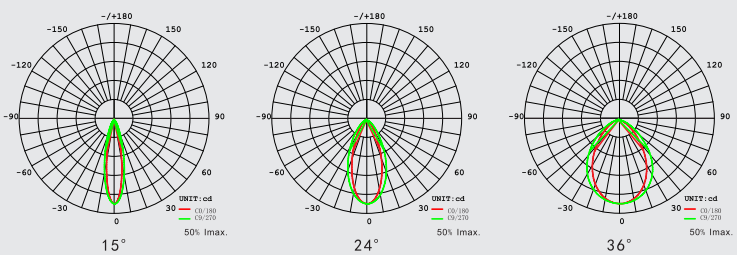



SPECIFICATIONS

Power Factor(PF)	>0.90
Lumen Efficiency	100Lm/W
CRI	>80
CCT	3000K-5000K & 3CCT Adjustable
Optional Beam Angle	15°/ 24°/ 36°
Class Cations	Class1 RoHS
Normal Voltage	200-260VAC 50/60Hz
Working Temperature	- 35°C < Ta < 35°C
Warranty	3 years
Surge Protection	2 KV
Track Adapter	3 wire / 4 wire

DIAGRAMS

Power	20W	30W
A mm(inch)	76(2.99)	88(3.46)
B mm(inch)	139(5.47)	147(5.79)
C mm(inch)	142(5.59)	153(6.02)
D mm(inch)	75(2.92)	75(2.92)

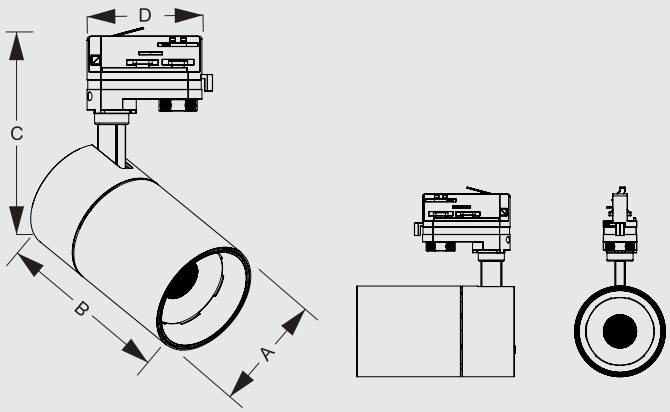

PACKAGING:

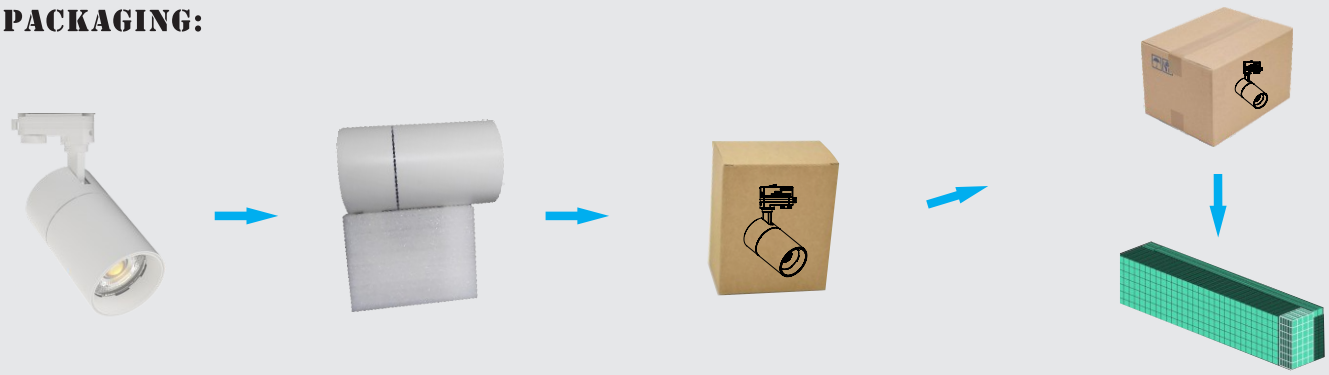

Model	Carton size (mm)	N.W. (kg)	G.W (kg)	QTY. (PCS)	20'Container (PCS)	40'Container (PCS)
TRL20W-A	340*310*315	\	\	16	\	\
TRL20W-A	322*292*340	\	\	12	\	\

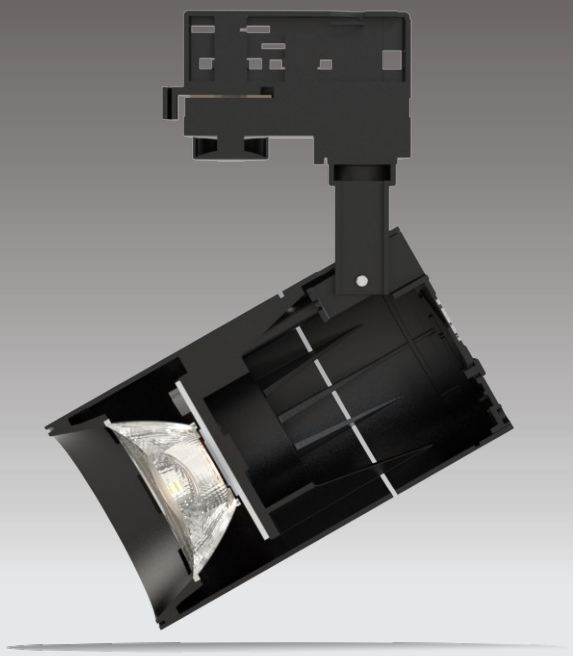

Features

1. Working Voltage: 100-130V AC /200-260V AC
2. Light Efficiency: 90-100lm/W.
3. Color rendering index Ra>80
4. Accurate beam angle 15°/ 24°/ 36°
5. CCT adjustable via DIP Switch.
6. Compatible with Tri-AC dimmers.
7. 2KV surge protection.
9. 3 Years Warranty
10. Comply with CE ROHS Certificates



CAUTIONS:

1. Installation must be done by professional electricians.
2. Do NOT take apart the product. It may be dangerous.
3. Do NOT stare at the light with naked eyes. It is harmful to eyes.
4. For outdoor lighting, waterproof measurements must be done to the cable terminals.

CONDITIONS AND EXCLUSIONS:

This warranty is conditioned upon proper installation, use and maintenance.

This warranty will automatically become null and void and shall not be applicable to any LED fixture which

(1) is damaged caused by force majeure such as war, riots, sabotage, cyclones, earthquakes, tidal waves, flooding. lighting strikes, explosions, fire, flood, etc.

(2) Is not installed and operated in accordance with the current edition of The National Electric Code .

(3) has been moved from its original installation.

(4) has been installed within an area that has exposure to sulfur or any area with high acidic compounds in use.

(5) has been operated in an ambient temperature or humidity that is higher than 35 degrees Celsius.

(6) has been subjected to a lightning strike, power surge or overvoltage condition.

(7) has been subjected to abnormal stresses and operating conditions.

(8) has been operated without overvoltage and lightning protection devices in place.