LED Waterproof Power Supply(C&V)



- Protections:short circuit/over load/over voltage/over temperature
- High power density, small size, high only 15.9mm,saving installation space;
- IP67 design for indoor or outdoor installation
- 100% full load burn-in test,
- Widely used in LED lighting and IT equipment
- Compliance to worldwide safety regulation for led lightings.

SELV IP67

High Reliability | Over-heat Protection | Short Circuit Protection | Over Load Protection | Over voltage protection

Specification

Model		YSD-200WHSF-24	YSD-200WHSF-48
OUTPUT	Output voltage	24VDC	48VDC
	Output voltage range	24VDC±2%	48VDC±2%
	Output current	Max 8.3A	Max 4.17A
	Output power	Max 200W	
	Output power range	0~200W	
	Linear Regulation	±1%	
	Load Regulation	±1%	
	Ripple & Noise	±2%	
	Start-up Time (Typ)	600ms/230VAC	
INPUT	Input voltage	176-264Vac	
	Frequency	50Hz/60Hz	
	Input current	1.9AMax.	
	Power factor	PF>0.55	
	No-load power consumption	< 0.5W	
	Efficiency (typ.)	94.5%	94.5%
	Inrush current(typ.)	Cold start 80A at 230Vac	
	Control surge capability	L,N:1KV L,N-PE:2KV	
	Leakage current	Max. 0.5mA	
ENVIRONMENT	Working temperature	ta: -30°C~ 45°C tc: 90°C	
	Working humidity	20 ~ 99%RH, non-condensing	
	Storage temp., humidity	-40°C ~ 80°C, 10~95%RH	
PROTECTION	Overtemperature	Protection type: Turn off the output voltage, after the temperature drops, re-energize to restore.	
	Over voltage protection	Shut down the output when non-load voltage≥27-35V, re-power on to recover after fault condition is removed.	Shut down the output when non-load voltage≥52-63V, re-power on to recover after fault condition is removed.
	Over load protection	Shut down the output when current load ≥110%~150%, auto recovers.	
	Short circuit protection	Protection type: It can be automatically restored after the fault is eliminated.	
SAFETY & EMC	Withstand voltage	I/P-O/P:3750Vac	
	Isolation resistance	I/P-O/P: 100MΩ/500VDC/25°C/70%RH	
	Safety standards	IEC/EN61347-1, IEC/EN61347-2-13	
	EMC emission	EN55015, EN61000-3-2 Class C, IEC61000-3-3	
	EMC immunity	EN61000-4-2,3,4,5,6,8,11 EN61547	
Reliability and Quality Control	Impact aging	100% of the product is fully loaded and impacted for 4 hours under an environment of at least 40°C ± 5°C	
	Component derating	Under the steady-state conditions of rated input and output, the stress of components will not exceed its maximum nominal value	
NOTE	1. All parameters not specifically mentioned are measured at 230VAC input, rated load and 25°C ambient temperature. 2. Ensure that the power supply is used under the rated parameters and environment.		

Dimensions
Unit:mm

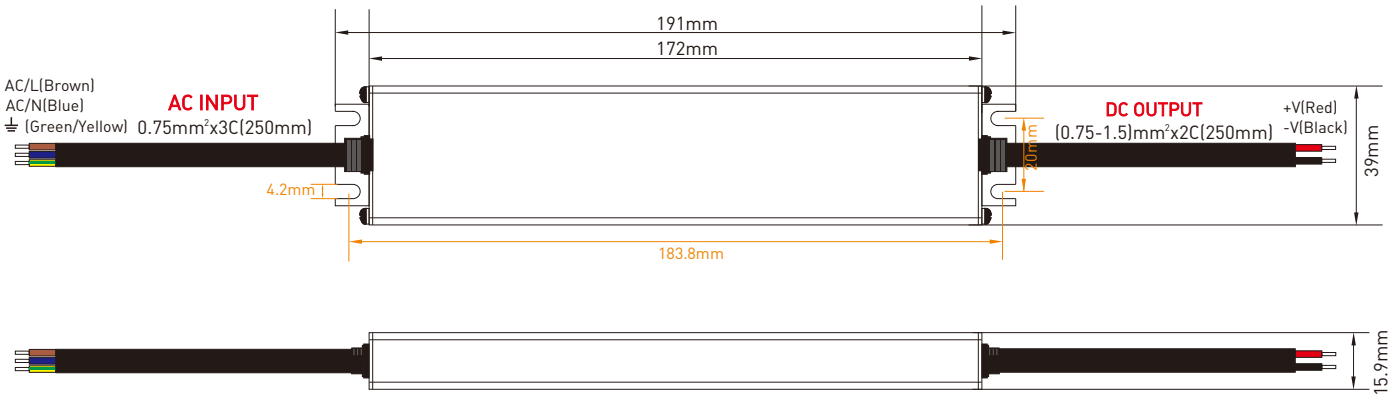

Relationship diagrams

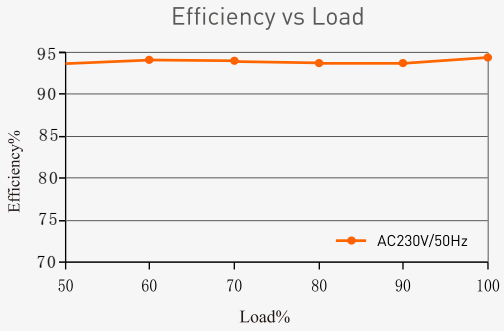

YSD-200WHSF-24

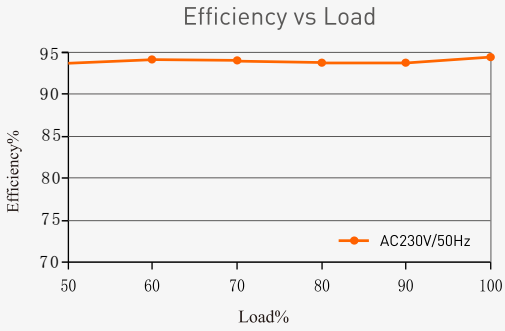

YSD-200WHSF-48

Packaging Information

DIMENSION	191x39x15.9mm(LxWxH)
PACKING	mm(LxWxH)
CARTON QUANTITY	PCS
CARTON SIZE	mm(LxWxH)
WEIGHT	260g±10g/PCS

Temperature load curve

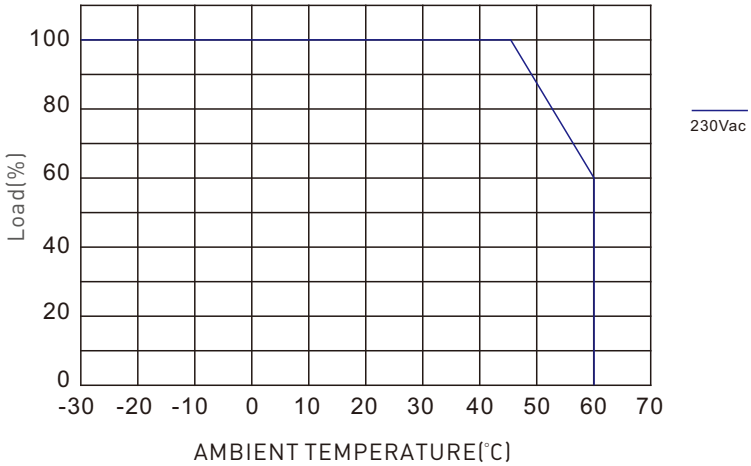

* No further notice if any changes in the manual. Product function depends on the goods. Please feel free to contact your supplier if any question.